RECHI

创新驱动 智造未来

Innovation drives · Intelligence creates

瑞智精密股份有限公司

Rechi Precision Co., Ltd.

32849 台湾桃园市观音区成功路二段943号
No. 943, Sec.2, Chenggong Rd., Guanyin Dist., Taoyuan City 328, Taiwan

Tel : +886-3-4837201 FAX : +886-3-4839784

青岛瑞智机电销售有限公司

Qingdao Rechi Electric Machinery Sales Co., Ltd.

523000 广东省东莞市虎门镇新联高科工业区高科三路38号
No. 38, Gaoke 3rd, Xinlian Administrative Industry Zone, Humen Town, Dongguan, China.

Tel : +86-769-85528857

www.rechi.com marketing@rechi.com

PROFESSIONAL ROTARY COMPRESSOR MANUFACTURER

瑞智精密
RECHI

2026 ROTARY COMPRESSOR for

Air-Conditioner, Dehumidifier Application

空调、除湿应用 迴转式压缩机 | 产品型录

PRODUCT CATALOG

ABOUT US 关于我們

瑞智精密成立于1989年，为全球第四大回转式压缩机领导品牌，始创之际即以＂技术独立自主、创建一流品牌、打造科技人生＂做为公司创业的初衷与理想，全体员工均秉持着＂以优异的品质，迈向市场竞争；以卓越的技术，永远领先业界；以完善的服务，赢得客户满意＂的经营理念，积极地发展公司的核心技术；以＂成为全球顶尖之压缩机关连产业链的知名供应商＂做为企业经营方针；以＂创造节能产业的无限可能，成为前瞻节能产品的顶尖提供者＂定位公司愿景！

36年来我们坚持以「品质至上」的理念，提供「顾客满意」的产品和服务，如今瑞智集团已设立有台湾桃园、广东东莞、广东惠州、山东青岛、江西九江、印度、埃及等7座生产基地，拥有压缩机年产能达3,000万台、直流无刷马达年产能达750万台及AC马达1,200万，现有回转式压缩机产品已扩及直流变频空调、北美单元式空调、分离式空调、移动式空调、窗型空调、除湿机、热泵干衣机、热泵热水器、热泵洗衣机、微型变频冷气、宠物空调等领域的应用。

未来瑞智集团将持续發展全球化布局，深耕各地市场，提升整体竞争力与服务能量。

瑞智集团以＂追求企业价值极大化、善尽爱护地球的企业责任＂为公司使命，

同时兼顾着地球的环境与资源，与国际知名企业建立良好战略合作伙

伴的关系，一起创建环保的未来世界！

RECHI was established in 1989 and became the world's fourth largest rotary compressor leader brand. RECHI PRECISION had established the company with the purpose and idea of “Technology Independent; Create Top-Class brand; Build-up the life of technology” ever since then; our employee all keep the philosophy of “Lead to the market competition with excellent quality; Always being the pioneer over the industry with top technology; Winning the customer satisfaction with perfect service” to develop and expand the core-technology of the company. Our business principle aims at Becoming the famous supplier of the global compressor supply chain”, and company vision at “Create unlimited possibilities for the Energy Saving Industry, and becoming the top provider of proactive Energy Saving Product.”

We believe that "Quality Superiority" and "Customer Satisfaction" with our products and services are the key to success over the past 36 years of RECHI, RECHI Group now has seven production sites in Taoyuan Taiwan, Dongguan Guangdong, Huizhou Guangdong, Qingdao Shandong, Jiujiang Jiangxi, India and Egypt with annual compressor capacity of 30 million sets, brushless DC motor capacity of 7.5 million sets, AC motor of 12 million sets. Presently our rotary compressor has expanded the applications in fields such as DC inverter A/C, Unitary A/C, Portable A/C, Window type A/C, Dehumidifier, Heat Pump Dryer, Heat Pump Water Heater, Heat Pump Washing Machine, and Mini-DC inverter A/C, Pet A/C.

In the future, Rechi Group will continue to expand its global presence, deepen its engagement in markets worldwide, and further enhance its overall competitiveness and service capabilities. RECHI PRECISION has kept “To pursuit the maximization of enterprise value” & “To fulfill the responsibility of caring the Earth” as corporate mission to watch over both the environment and resource, also establishes good relationship of strategic partners with global well-known enterprises to create the green future together.

MILESTONE 里程碑

1989 — 1989年12月创立
Since 1989 Dec.

1991 — Rotorex 技術合作
Rotorex patent transferred

1995 — 39F/48F R22回转式压缩机
39F/48F R22 rotary compressor

1998 — 39F/48F R407C 回转式压缩机
44F R22 回转式压缩机
39F/48F R407C rotary compressor
44F R22 rotary compressor

2005 — 44F R22
DC变频 回转式压缩机
44F R22 DC inverter rotary compressor

2006 — 50F/55F R22回转式压缩机
50F/55F R22 rotary compressor

2009 — 39F/43F/44F R410A
DC变频 回转式压缩机
39F/43F/44F R410A DC inverter rotary compressor

2012 — 45F R410A
DC双缸变频
回转式压缩机
45F R410A DC Inverter rotary compressor (Twin Cylinder)

2013 — 44F / 50F R32
回转式压缩机
44F/50F R32 rotary compressor

2014 — 压缩机累积
产销量达1亿台
Accumulative sales of compressors achieved 100 million units in 2014

2015 — 35F R134a
回转式压缩机
35F R134a rotary compressor
35F/50F R410A
DC变频 回转式压缩机
35F/50F R410A DC inverter rotary compressor

2017 — 36F R290 DC双缸变频 回转式压缩机
51F R410A/R32 DC双缸变频 回转式压缩机
36F R290 DC inverter rotary compressor (Twin Cylinder)
51F R410A/R32 DC inverter rotary compressor (Twin Cylinder)

2018 — 20F R134a DC变频 回转式压缩机
56F R410A/R32 双缸回转式压缩机
20F R134a DC inverter rotary compressor
56F R410A/R32 rotary compressor (Twin Cylinder)

2019 — 40F R410A/R32
双缸回转式压缩机
40F R410A/R32 rotary compressor (Twin Cylinder)

2020 — 压缩机累积产销量达2亿台
Accumulative sales of compressors achieved 200 million units in 2020
44F R32臥式迴轉式壓縮機
44F R32 Horizontal type rotary compressor

2022 — 40F DC inverte在 2022年加
40F D C 变频卧式回转式压缩机
rhorizontal rotary compressor

2023 — 在 2023年加
DC变频 8P/12S 回转式压缩机
DC inverter 8P/12S rotary compressor

2024 — 在 2024年加
50/55F R32 内平衡回转式压缩机
50/55F R32 internal pressure equalization rotary compressor
31F DC变频回转式压缩机
31F DC inverter rotary compressor

2025 — 压缩机累积
产销量达3亿台
Accumulative sales of compressors achieved 300 million units in 2025
在 2025年加
DC变频 10P/15S
回转式压缩机
DC inverter 10P/15S rotary compressor

FACTORY LOCATION & CERTIFICATION MAP
全球工厂与认证布局

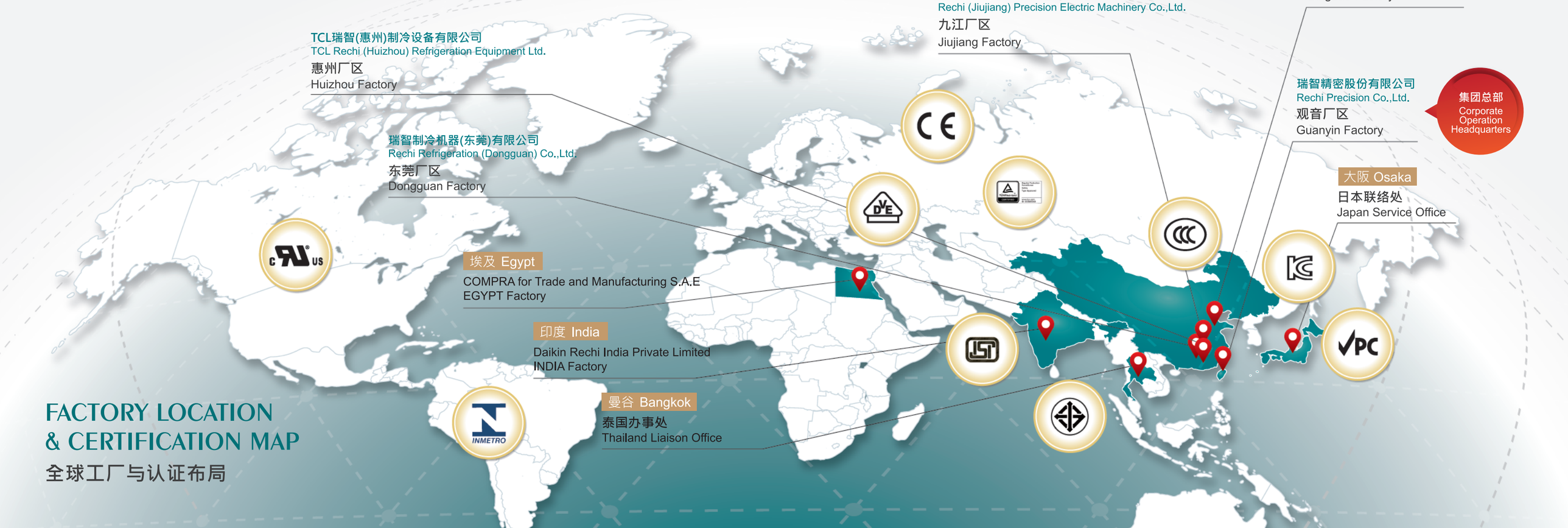

RECHI

空调、除湿应用

Air-Conditioner、Dehumidifier Application

CONTENTS 目錄

◆ 压缩机编码原则 1 Compressor Code Identification 1

机体系列 Frame Series

代码 Code	马达外径 Motor O.D	汽缸数目与型式 Cylinder No.and Type	
		数目 No.	型式 Type
20	Ø 50.8	1	-
21		2	-
35	Ø 91.5	1	-
36		2	-
39	Ø 101	1	-
40		2	-
43	Ø 112	1	较小 Smaller
44		1	标准 Standard
45		2	-
50	Ø 125	1	-
55	Ø 139	1	-
3H	Ø 91.5	1	卧式 Horizontal
3L		2	卧式 Horizontal
4M	Ø 101	2	卧式 Horizontal

电源 Power Source

代码 Code	电压 Voltage	频率 Hz
1	115	60
2	208-230	60
3	220-240	50
4	200-240 宽电压 Wide Voltage	50
5	100/100-110	50/60
6	115-127	60
7	265	60
8	200/200-220	50/60
9	230	50
G-T	DC 集中卷+稀土磁石 DC Concentrated Winding + Rare-Earth Magnet	Inverter

冷媒量 + 马达组合 Refrigerant Quantity + Motor Combination

代码 Code	冷媒量 Refrigerant Quantity	马达型式 Motor Type	
		定速 Single Speed	变频 DC Inverter
A-F	一般 General	外置式 OLP External OLP	不同型式之卷绕及极 / 槽数 Different Types of Winding & Poles / Slots
G-M, 1-3	一般 General	内置式 OLP Internal OLP	
I,N-Q	一般 General	内置式OLP+鋁線 Internal OLP+Al	
R-T	多 More		
U-Z, 4-9	多 More	内置式 OLP Internal OLP	

例. Ex. 39 A 12 1 A A & 1 4 K A

冷房能力 Cooling Capacity: Number *100 Kcal/hr @ASHRAE/T

储液瓶 Accumulator

泵型式 Pump Type

角架 Base Plate

顶盖 Top Cap

机油种类 Oil Type

机油量 Oil Volume

冷媒与工作工况 Refrigerant and Working Condition

代码 Code	冷媒 Refrigerant	工作工况 Working Condition	典型应用 Typical Application
A	R410A	ASHRAE/T	一般 (中冷凝温度) 空调机/ RV 房车空调/ 驻车用空调机/ 工业制冷应用 General (Medium Condensing Temp.) Air-Conditioner / RV Air-Conditioner / Truck Parking Air-Conditioner /Industrial Refrigeration Application
B		NGB	高效 (低冷凝温度) 空调机 / 除湿机 High-EER (Low Condensing Temp.) Air-Conditioner / Dehumidifier
M		ASHRAE/T + T3	热带 T3 (高冷凝温度) 空调机 Tropical T3 (High Condensing Temp.) Air-Conditioner
E	R134a	ASHRAE/T	一般 (中冷凝温度) 除湿机/ 热泵洗干衣机/ 驻车用空调机 General (Medium Condensing Temp.) Dehumidifier / Heat-Pump Washer-Dryer / Truck Parking Air-Conditioner
F		HPD ; ASHRAE/T	热泵干衣机 / 洗干衣机 ; 机柜空调 Heat-Pump Dryer / Washer-Dryer ; Cabinet Air Conditioner
G		HPWH	热泵热水器 Heat-Pump Water-Heater
H		NGB	高效 (低冷凝温度) 除湿机 High-EER (Low Condensing Temp.) Dehumidifier
J	R454B	ASHRAE/T	一般 (中冷凝温度) 空调机 General (Medium Condensing Temp.) Air-Conditioner
K		NGB	高效 (低冷凝温度) 空调机 High-EER (Low Condensing Temp.) Air-Conditioner
L		CHEER ; NDOE	北美单元式 (更低冷凝温度) 空调机 US Unitary (Lower Condensing Temp.) Air-Conditioner
P	R290	ASHRAE/T	一般 (中冷凝温度) 空调机 / 除湿机 / RV 房车空调 General (Medium Condensing Temp.) Air-Conditioner / Dehumidifier / RV Air-Conditioner
Q		HPD	热泵干衣机 / 洗干衣机 Heat-Pump Dryer / Washer-Dryer
U		HPWH	热泵热水器 Heat-Pump Water-Heater
W	R32	ASHRAE/T	一般 (中冷凝温度) 空调机 / 除湿机 / RV房车空调 General (Medium Condensing Temp.) Air-Conditioner / Dehumidifier / RV Air-Conditioner
X		NGB	高效 (低冷凝温度) 空调机 / 除湿机 High-EER (Low Condensing Temp.) Air-Conditioner / Dehumidifier
Y		CHEER ; NDOE	北美单元式 (更低冷凝温度) 空调机 ; 北美 DOE 除湿机 US Unitary (Lower Condensing Temp.) Air-Conditioner ; US DOE Dehumidifier

◆ 压缩机编码原则 2 Compressor Code Identification 2

冷媒 Refrigerant

W	R-32
Q	R-290
B	R-454B
G	R-454C
A	R-410A
E	R-134a
J	R-513A
D	R-1270
C	R-407C

结构 Structure

S	立式单缸 Vertical single-cylinder
T	立式双缸 Vertical twin-cylinder
H	卧式单缸 Horizontal single-cylinder
J	卧式双缸 Horizontal twin-cylinder
L	侧边出线 Side outlet
X	立式单缸 补气增焓 Vertical single-cylinder Enhanced Vapor Iniection (EVI)
Y	立式双缸 补气增焓 Vertical twin-cylinder Enhanced Vapor Injection (EVI)
U	卧式单缸 补气增焓 Horizontal single-cylinder Enhanced Vapor Injection (EVI)
V	卧式双缸 补气增焓 Horizontal twin-cylinder Enhanced Vapor Injection (EVI)

电源 Power Source

1	1Ø - 115V/60Hz
2	1Ø - 208-230V/60Hz
3	1Ø - 220-240V/50Hz
4	1Ø-200-240V/50Hz
5	1Ø-100V/50Hz;100-110V/60Hz
6	1Ø - 115-127V/60Hz
7	1Ø - 265V/60Hz
8	1Ø-200V/50Hz;200-220V/60Hz
9	1Ø - 230V/50Hz
J	3Ø - DC inverter
K	DC 12V
L	DC 24V
M	DC 48V

例. Ex. W P 098 S J 70 - B 01

排气量 Displacement: (cm3 /rev)/10 098 : 9.8cc

马达 Motor

外观 Appearance

系列 Series

代码 Code	Frame	定子外径 Stator OD
H	20	Ø 50.8
S	31	Ø 80
M	35	Ø 91.5
P	39	Ø 101
Z	44	Ø 112
B	50	Ø 125
R	55	Ø 139

应用 Typical Application

A	空调:除湿机:驻车空调(中冷凝温度) Air-conditioner : Dehumidifier;Parking air-conditioner (Medium cond. temp.)
B	高效空调:高效除湿机(低冷凝温度) High-efficiency air-conditioner;High efficiency dehumidifier (Low cond. temp.)
C	单元式空调(更低冷凝温度) US Unitary air-conditioner (Lower cond. temp.)
T	热带型空调 (高冷凝温度) Tropical air-conditioner (High cond. temp.)
D	热泵干衣机 Heat-pump dryer
W	热泵热水器 Heat-pump water-heater
F	冷冻冷藏 Freezing and refrigeration
N	北美DOE除湿机 US DOE dehumidifier
G	机柜空调 Cabinet air-conditioner

压缩机能力分布图 Compressor Cooling Capacity Range

直流变频压缩机 DC Inverter Compressor

Testing Condition: ASHRAE/T

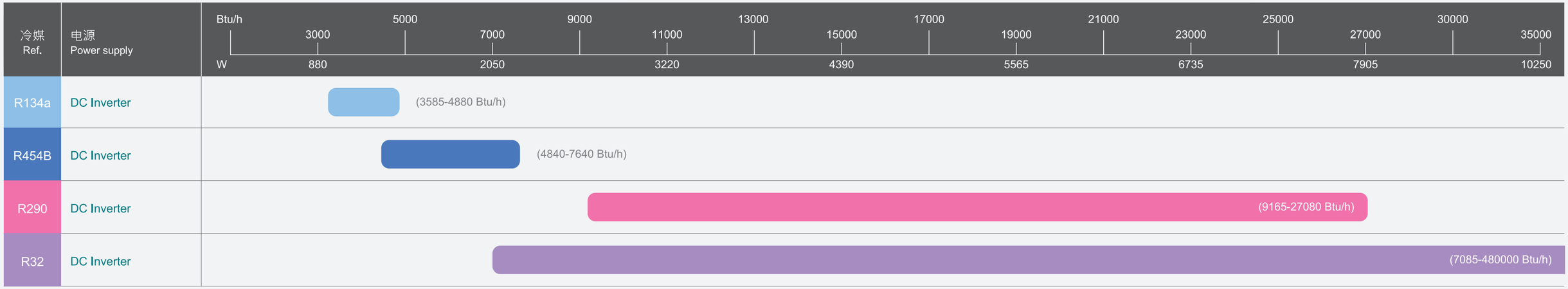

定速压缩机 Single Speed Compressor

Testing Condition: ASHRAE/T

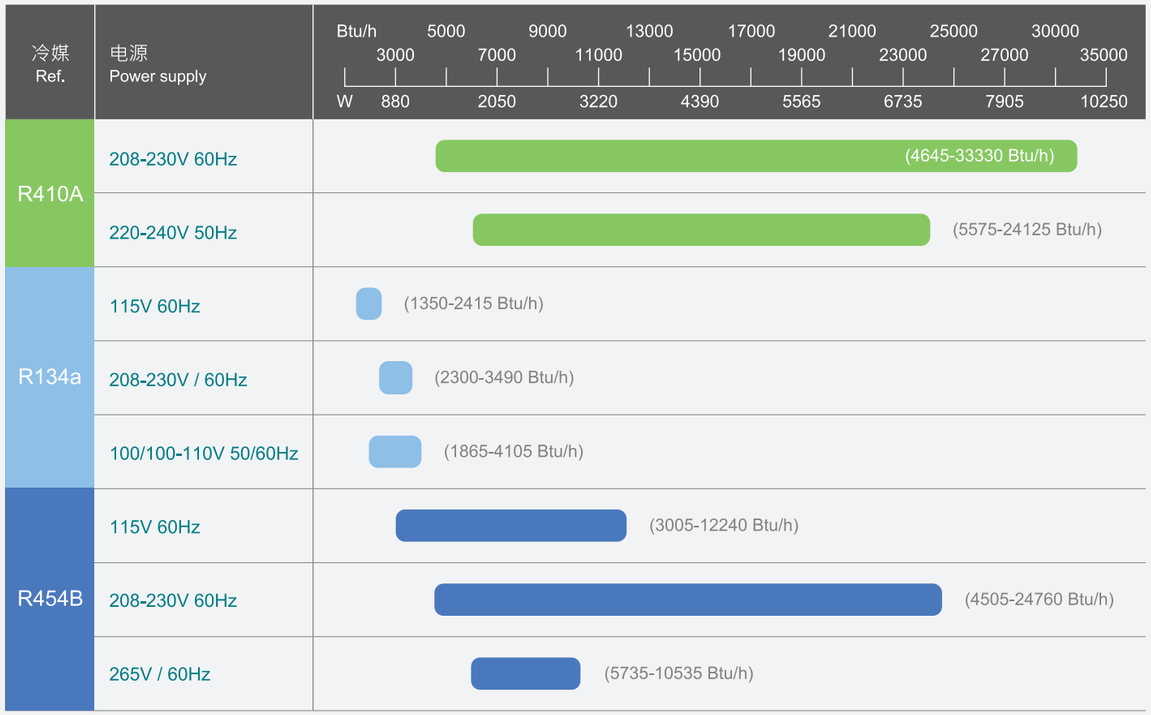

定速压缩机 Single Speed Compressor

Testing Condition: ASHRAE/T

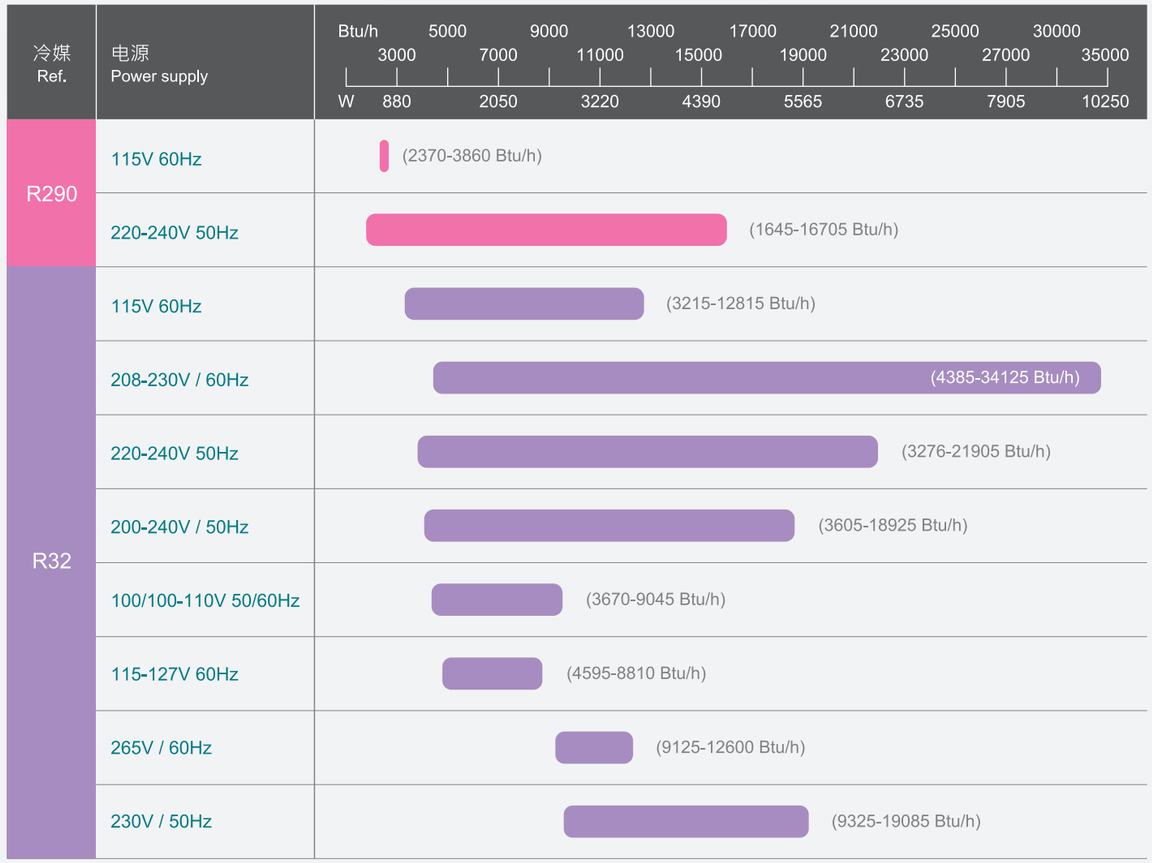

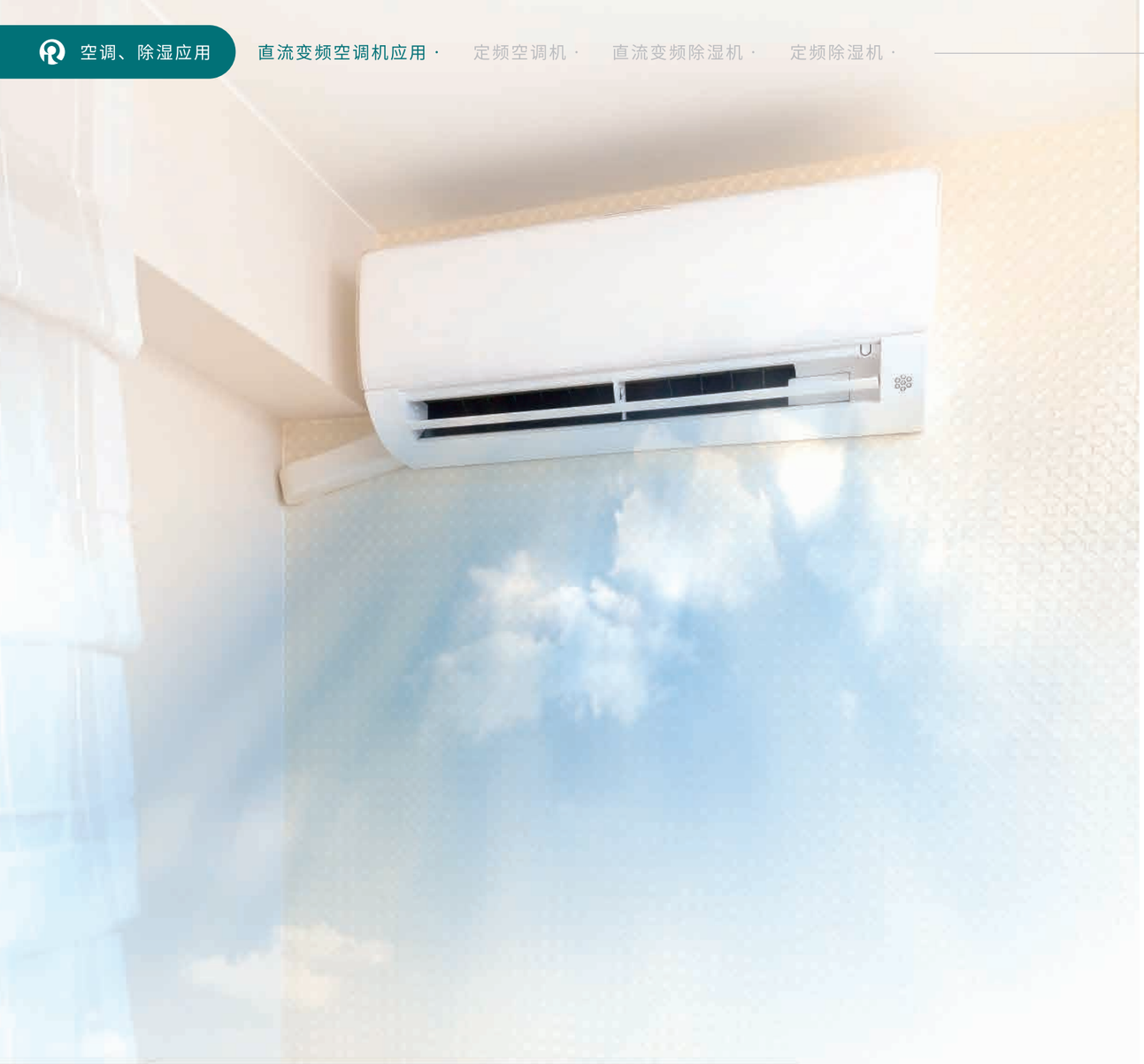

直流变频空调机应用

DC Inverter Air-Conditioner Application

低GWP环保冷媒 / 高效率泵体设计 / 低噪音振动 / 高可靠度 / 小型化设计 / 具备多种排气量机种可选择

Low GWP environmentally friendly refrigerant / High efficiency pump design / Low noise and vibration
Great reliability / Miniaturized design / Variety of displacement models lineup

R32 单缸直流变频 DC Inverter Single Cylinder

空调机
Air-Conditioner

Testing Condition: ASHRAE/T / NGB

Series	Model	Disp.	Cooling Capacity		Input Power (Inverter Included)	Input Power (Inverter Excluded)	COP (Inverter Included)	COP (Inverter Excluded)	Outline Drawing	Safety Approval						Testing Condition
		c.c.	Btu/h	W	W	W	W/W	W/W		C-UL	VPC	TUV	CCC	VDE	Others	
31	WS050SJ70	5.0	5990	1510	575	460	2.63	3.28	31-01	◎					CB	NGB
35	35W17UU	6.5	7085	2075	715	660	2.90	3.14	35-N							ASHRAE/T
	35W20MG	7.5	9045	2650	725	670	3.66	3.96	35-N			◎				NGB
	35W20PK	7.5	8255 9165	2415 2685	840 695	775 645	2.88 3.86	3.12 4.16	35-X	◎						
	WM075SJ71	7.5	9015	2640	665	630	3.97	4.19	35-76	◎						NGB
	WM081SJ70(○)	8.1	9720	2845	740	690	3.84	4.12	35-N			◎			CB	NGB
	WM098SJ70(○)	9.8	11965	3505	915	855	3.83	4.10	35-N	◎		◎	◎		CB	NGB
39	WP089SJ70	8.9	10835	3170	800	745	3.96	4.26	39-Z1							NGB
	WP098SJ72(○)	9.8	12100	3545	910	845	3.90	4.20	39-V	◎		◎	◎			NGB
	WP098SJ73(○)	9.8	12100	3545	905	840	3.92	4.22	39-W				◎			NGB
	WP102SJ70	10.2	12770	3740	920	860	4.07	4.35	39-93				◎			NGB
	39W2JLA	12.0	13095	4250	1080	1015	3.94	4.19	39-Q			◎	◎			NGB
	WP120SJ71	12.0	14510	4250	1075	1005	3.95	4.23	39-93			◎	◎		CB	NGB
	39W37LA	14.0	15040 16885	4405 4945	1680 1265	1540 1185	2.62 3.91	2.86 4.17	39-Q				◎			
	39W37MX	14.0	15395 17140	4510 5020	1580 1270	1445 1190	2.85 3.95	3.12 4.22	39-Q		◎		◎			
43	43W26HL	9.75	10695	3130	990	915	3.16	3.42	44-03							ASHRAE/T

(○) 机型为8极集中卷稀土磁石 8 Pole Concentrated winding with Rare Earth Magnet

R32 双缸直流变频 DC Inverter Twin Cylinder

空调机
Air-Conditioner

Testing Condition: ASHRAE/T / NGB

Series	Model	Disp.	Cooling Capacity		Input Power (Inverter Included)	Input Power (Inverter Excluded)	COP (Inverter Included)	COP (Inverter Excluded)	Outline Drawing	Safety Approval						Testing Condition
		c.c.	Btu/h	W	W	W	W/W	W/W		C-UL	VPC	TUV	CCC	VDE	Others	
32	WS075TJ70	7.5	8845	2590	695	655	3.73	3.95	32-01							NGB
36	WM070TJ70	7.0	8280	2425	625	585	3.88	4.15	36-01						CB	NGB
40	40W39MX	14.6	15910 17950	4660 5260	1555 1280	1440 1150	3.00 4.11	3.24 4.57	40-03 40-03			◎	◎		CB	
	40W53LM	20.0	22140 25000	6485 7320	2260 1860	2090 1665	2.87 3.94	3.10 4.40	40-03		◎		◎		Inmetro	
	40W58LK	22.0	24780 27735	7255 8120	2665 2120	2390 1945	2.72 3.83	3.04 4.17	40-03							
45	45W39SW	14.6	16150 18230	4730 5340	1520 1250	1405 1120	3.11 4.27	3.37 4.77	45-03 45-03				◎			
	45W37SZ(*)	14.0	15575 17570	4560 5145	1420 1165	1315 1050	3.21 4.42	3.47 4.90	45-03 45-03							
	WZ246TJ70(*)	24.6	27450	8035	2785	2555	2.89	3.14	45-05							ASHRAE/T
53	WN420TJ70(*)	42.0	52930	15500	3950	3850	3.92	4.03	50-07							NGB

(*)开发中 under developing

R454B 单缸直流变频 DC Inverter Single Cylinder

J 空调机
Air-Conditioner

Testing Condition: ASHRAE/T

Series	Model	Disp.	Cooling Capacity		Input Power (Inverter Included)	Input Power (Inverter Excluded)	COP (Inverter Included)	COP (Inverter Excluded)	Outline Drawing	Safety Approval					
		c.c.	Btu/h	W	W	W	W/W	W/W		C-UL	VPC	TUV	CCC	VDE	Others
35	35J1CQX(*)	5.0	4840	1420	480	445	2.96	3.19	35-N	◎					
	35J1KMX(*)	7.75	7640	2235	745	690	3.00	3.24	35-N	◎					

(*)开发中 under developing

R290 单缸直流变频 DC Inverter Single Cylinder

P 空调机
Air-Conditioner

Testing Condition: ASHRAE/T / NGB

Series	Model	Disp.	Cooling Capacity		Input Power (Inverter Included)	Input Power (Inverter Excluded)	COP (Inverter Included)	COP (Inverter Excluded)	Outline Drawing	Safety Approval						Testing Condition
		c.c.	Btu/h	W	W	W	W/W	W/W		C-UL	VPC	TUV	CCC	VDE	Others	
35	QM140SJ70(*)	14.0	9165	2685	830	770	3.23	3.49	35-S2							ASHRAE/T
39	39P22LA	14.0	9125	2675	795	735	3.36	3.64	39-W1			◎				ASHRAE/T
	QP180SJ70	18.0	11565	3380	1030	920	3.28	3.67	39-Q							
			12225	3580	845	785	4.24	4.56								NGB
	QP210SJ70	21.0	15575	3975	1170	1085	3.40	3.66	39-Q							
			16545	4170	985	930	4.23	4.48								NGB

(*)开发中 under developing

R290 双缸直流变频 DC Inverter Twin Cylinder

P 空调机
Air-Conditioner

Testing Condition: ASHRAE/T / NGB

Series	Model	Disp.	Cooling Capacity		Input Power (Inverter Included)	Input Power (Inverter Excluded)	COP (Inverter Included)	COP (Inverter Excluded)	Outline Drawing	Safety Approval						Testing Condition
		c.c.	Btu/h	W	W	W	W/W	W/W		C-UL	VPC	TUV	CCC	VDE	Others	
39	QP184TJ71(*)	18.4	12815	3755	905	855	4.15	4.39	39-U							NGB
	QP200TJ72(*)	20.0	12975	3800	1170	1085	3.25	3.50	39-Y							ASHRAE/T
	QP220TJ71(*)	22.0	15315	4485	1080	1020	4.15	4.40	39-T							NGB
45	QZ310TJ70(*)	31.0	19975	5850	1690	1595	3.46	3.67	45-05							ASHRAE/T
53	QN420TJ70(*)	42.0	27080	7930	2330	2200	3.40	3.60	50-07							ASHRAE/T

(*)开发中 under developing

定频空调机应用

Single Speed Air-Conditioner Application

低GWP环保冷媒 / 高效率泵体设计 / 低噪音振动 / 可对应全球电源范围 / 针对各特殊市场需求设计
符合全球各区域安规认证需求

Low GWP environmentally friendly refrigerant / High efficiency pump design / Low noise and vibration
Compatible with global power supply range / Specific design for each market demand
Meet the requirements of safety certification in the world

R32 1φ 115V / 60Hz

W 一般 (中冷凝温度) 空调机
General (Medium Condensing Temp.) Air-Conditioner

Testing Condition: ASHRAE/T

Series	Model	Disp.	Capacitor		Cooling Capacity		Input Power	EER	COP	Outline Drawing	Safety Approval					
		c.c.	μ F	VAC	Btu/h	W	W	Btu/h.W	W/W		C-UL	VPC	TUV	CCC	VDE	Others
39	39W1G1Q	6.65	45	250	7025	2055	760	9.24	2.70	39-76	◎					
	WP069S101	6.85	50	250	7148	2095	791	9.04	2.65	39-85						
	WP070S170	7.25	40	250	7558	2215	800	9.45	2.77	39-86	◎					
	WP073S102	7.25	50	250	7680	2250	836	9.19	2.69	39-78	◎					
	39W201N	7.9	45	250	8215	2405	870	9.44	2.76	39-06	◎					
44	44W211N	8.1	55	250	8650	2535	895	9.66	2.83	44-82	◎					
	44W221N	8.35	55	250	8890	2605	925	9.61	2.82	44-82			◎			
	44W2D1I	8.9	45	320	9585	2805	990	9.68	2.83	44-82	◎					
	WZ092S101	9.2	70	250	9905	2900	1030	9.62	2.82	44-78	◎					
	44W2E1I	9.4	50	250	10100	2955	1005	10.05	2.94	44-82	◎		◎			
	44W2G1I	10.1	55	250	10715	3135	1140	9.40	2.75	44-82	◎					CB
	44W271N	10.3	55	250	11130	3260	1110	10.03	2.94	44-82	◎					
	WZ106S101	10.55	55	320	11305	3310	1190	9.50	2.78	44-79	◎					
	44W2H1P	10.55	60	250	11310	3310	1120	10.10	2.96	44-84						Inmetro,CB
	44W281I	10.8	60	320	11605	3400	1225	9.47	2.78	44-84	◎					
	44W281K	10.8	55	250	11545	3380	1155	10.00	2.93	44-84	◎					
	WZ119S170	11.9	60	320	12815	3755	1330	9.64	2.82	44-A3	◎					
	44W291I	11.4	60	320	11825	3465	1280	9.24	2.71	44-F9	◎					

R32 1φ 115V / 60Hz

X 高效 (低冷凝温度) 空调机
High-EER (Low Condensing Temp.) Air-Conditioner

Testing Condition: ASHRAE/T / NGB

Series	Model	Disp.	Capacitor		Cooling Capacity		Input Power	EER	COP	Outline Drawing	Safety Approval						Testing Condition
		c.c.	μ F	VAC	Btu/h	W	W	Btu/h.W	W/W		C-UL	VPC	TUV	CCC	VDE	Others	
35	35X1M1G	4.3	35	250	4305 4840	1260 1420	458 382	9.40 12.67	2.75 3.72	35-66	◎						
	35X141M	5.25	35	250	5080 5970	1485 1750	583 470	8.71 12.70	2.55 3.72	35-66	◎	◎					
39	39X121I	4.3	35	250	4485 5020	1315 1470	469 398	9.56 12.61	2.80 3.69	39-76	◎						
	39X1C1N	4.5	40	250	4545 5160	1330 1510	495 414	9.18 12.46	2.69 3.65	39-76	◎						
	WP052S170(*)	5.15	40	250	6010	1760	450	13.36	3.91	39-77							NGB
	39X141N	5.25	40	250	5435 6090	1590 1785	565 470	9.62 12.96	2.81 3.80	39-76	◎						
	39X1G1I	6.65	35	250	7915	2320	610	12.98	3.80	39-A2	◎						NGB
	39X201G	7.9	55	250	8135 9245	2380 2705	840 705	9.68 13.11	2.83 3.84	39-06	◎						
	39X221G	8.6	60	250	8750 9980	2560 2920	925 775	9.46 12.88	2.77 3.77	39-74	◎						
	39X231G	9.0	60	250	9185 10425	2690 3055	965 805	9.52 12.95	2.79 3.80	39-06	◎						
44	44X271L	10.3	55	250	10495 11985	3075 3510	1090 905	9.63 13.24	2.82 3.88	44-J4	◎						
	44X311K	11.9	55	250	12180 13850	3565 4055	1245 1070	9.78 12.94	2.86 3.79	44-07	◎						

(*)开发中 under developing

R32 1φ 208-230V / 60Hz

W 一般 (中冷凝温度) 空调机
General (Medium Condensing Temp.) Air-Conditioner

Testing Condition: ASHRAE/T

Series	Model	Disp.	Capacitor		Cooling Capacity		Input Power	EER	COP	Outline Drawing	Safety Approval					
		c.c.	μ F	VAC	Btu/h	W	W	Btu/h.W	W/W		C-UL	VPC	TUV	CCC	VDE	Others
44	44W222N	8.35	25	370	8610	2520	905	9.51	2.78	44-84			◎			
	WZ094S201	9.4	30	370	9630	2820	975	9.88	2.89	44-80						CB
	44W252N	9.6	25	370	10235	3000	1015	10.08	2.96	44-84	◎					
	WZ096S201	9.6	30	370	10245	3000	1055	9.71	2.84	44-81	◎					
	WZ108S201	10.8	35	420	11370	3330	1185	9.59	2.81	44-75						
50	50W3522	13.5	40	420	14365	4205	1445	9.94	2.91	50-01	◎					
	50W4122	15.5	35	420	16070	4705	1640	9.80	2.87	50-01	◎					
55	55W862G	33.0	40	420	34125	9995	3570	9.56	2.80	55-51	◎					

R32 1φ 208-230V / 60Hz

X 高效 (低冷凝温度) 空调机
High-EER (Low Condensing Temp.) Air-Conditioner

Testing Condition: ASHRAE/T / NGB

Series	Model	Disp.	Capacitor		Cooling Capacity		Input Power	EER	COP	Outline Drawing	Safety Approval						Testing Condition
		c.c.	μ F	VAC	Btu/h	W	W	Btu/h.W	W/W		C-UL	VPC	TUV	CCC	VDE	Others	
35	35X1B2H	4.4	10	450	4385 5000	1285 1465	485 410	9.04 12.20	2.65 3.57	35-26							
39	39X132N	4.65	15	420	4800 5395	1405 1580	515 435	9.32 12.40	2.73 3.63	39-76				◎			
	39X142N	5.25	15	370	5490 6165	1610 1805	569 480	9.65 12.84	2.83 3.76	39-76						KC	
	39X162G	6.5	18	370	6705 7560	1965 2215	690 580	9.72 13.03	2.85 3.82	39-06	◎						
	39X192G	7.25	25	370	7460 8470	2185 2480	760 650	9.82 13.03	2.88 3.82	39-06	◎					CB	
	39X202G	7.5	25	370	7660 8650	2245 2535	790 665	9.70 13.01	2.84 3.81	39-06						CB	
	39X232G	9.0	20	370	9165 10395	2685 3045	965 810	9.50 12.83	2.78 3.76	39-06	◎						
44	WZ096S240	9.6	25	370	11405	3340	850	13.42	3.93	44-81			◎				NGB
	WZ103S201	10.3	30	320	10995 12325	3220 3610	1110 930	9.91 13.25	2.90 3.88	44-K3						CB	
	WZ103S201	10.3	30	320	10995 12325	3220 3610	1110 930	9.91 13.25	2.90 3.88	44-K3						CB	
	44X2H2N	10.55	40	370	11350 12670	2460 2750	1135 960	10.00 13.20	2.17 2.86	44-07	◎						
	44X302K	11.9	30	420	12580 14145	3685 4145	1255 1055	10.02 13.41	2.94 3.93	44-07	◎						
	44X362K	13.5	30	420	14385 16150	4210 4730	1440 1225	9.99 13.18	2.92 3.86	44-07	◎						
50	WB164S270	16.4	30	420	18200	5330	1315	13.84	4.05	50-06							NGB
	50X572I	22.2	40	450	23610 26825	6915 7855	2365 2000	9.98 13.41	2.92 3.93	50-H2	◎						

R32 1φ 208-230V / 60Hz

Y 北美单元式 (更低冷凝温度) 空调机
US Unitary (Lower Condensing Temp.) Air-Conditioner

Testing Condition: ASHRAE/T / CHEER

Series	Model	Disp.	Capacitor		Cooling Capacity		Input Power	EER	COP	Outline Drawing	Safety Approval					
		c.c.	μ F	VAC	Btu/h	W	W	Btu/h.W	W/W		C-UL	VPC	TUV	CCC	VDE	Others
50	50Y3829	14.4	40	370	15180 18690	4445 5475	1510 1010	10.05 18.50	2.94 5.42	50-55	◎					
	50Y4929	18.7	40	370	20020 24465	5860 7165	1955 1285	10.24 19.04	3.00 5.58	50-55	◎					
55	55Y622U	23.0	45	370	23985 29880	7025 8750	2365 1585	10.14 18.85	2.97 5.52	55-51(b)	◎					

R32 1φ 220-240V / 50Hz

W 一般 (中冷凝温度) 空调机
General (Medium Condensing Temp.) Air-Conditioner

Testing Condition: ASHRAE/T

Series	Model	Disp.	Capacitor		Cooling Capacity		Input Power	EER	COP	Outline Drawing	Safety Approval					
		c.c.	μ F	VAC	Btu/h	W	W	Btu/h.W	W/W		C-UL	VPC	TUV	CCC	VDE	Others
39	WP063S301	6.25	30	370	5340	1565	634	8.42	2.47	39-87				◎		
	WP079S301	7.9	20	370	6773	1985	799	8.48	2.48	39-A4				◎		
	39W1J3I	8.8	40	420	7336	2150	950	7.72	2.26	39-88				◎		
	39W193I	9.0	30	450	7540	2210	925	8.15	2.39	39-X			◎	◎		
	WP095S301	9.5	35	370	8035	2355	1015	7.92	2.32	39-R			◎	◎		CB
44	44W243N	11.1	35	370	9760	2860	980	9.96	2.92	44-07			◎			
	WZ094S301	9.4	35	370	8180	2395	860	9.51	2.78	44-80						CB
	44W2H3I	12.8	45	450	11050	3235	1300	8.50	2.49	44-07			◎	◎		
	44W293G	13.5	40	370	11725	3435	1205	9.73	2.85	44-04			◎	◎		
	WZ147S370	14.7	35	420	11905	3845	1260	9.45	2.77	44-87						CB
50	50W3936	18.2	45	400	15635	4580	1585	9.86	2.89	50-F5						
	WB192S371	19.2	50	370	16375	4900	1645	10.17	2.98	50-06						
55	55W523H	24.6	50	400	21030	6160	2100	10.01	2.93	55-51						

R32 1φ 220-240V / 50Hz

X 高效 (低冷凝温度) 空调机
High-EER (Low Condensing Temp.) Air-Conditioner

Testing Condition: ASHRAE/T / NGB

Series	Model	Disp.	Capacitor		Cooling Capacity		Input Power	EER	COP	Outline Drawing	Safety Approval						Testing Condition
		c.c.	μ F	VAC	Btu/h	W	W	Btu/h.W	W/W		C-UL	VPC	TUV	CCC	VDE	Others	
35	WM034S340	3.35	10	370	2825	827	254	11.12	3.26	35-67				◎		CB	NGB
	WM040S370	4.0	15	420	3430	1005	304	11.28	3.31	35-67				◎		CB	NGB
	35X103G	5.15	12	450	4185 4820	1225 1410	498 419	8.40 11.50	2.46 3.37	35-66			◎				
39	WP039S301	3.9	15	370	3276 3702	960 1085	361 305	9.07 12.14	2.66 3.56	39-89			◎				
	39X113H	5.4	20	470	4425 5040	1295 1475	490 400	9.03 12.60	2.64 3.69	39-76			◎				
44	44X183N	8.35	25	420	7160 8155	2095 2390	755 630	9.48 12.94	2.77 3.79	44-07			◎	◎			
	WZ084S340	8.35	25	370	7240 8160	2120 2390	730 610	9.92 13.38	2.90 3.92	44-A1			◎				
	44X1K3I	8.9	30	420	7740 8770	2265 2570	815 685	9.50 12.80	2.78 3.75	44-07			◎	◎			
	44X2G3I	12.1	35	370	10120 11505	2965 3370	1075 895	9.41 12.85	2.76 3.77	44-J4				◎			
50	50X4C33	19.5	40	450	17005 19245	4980 5635	1720 1425	9.89 13.51	2.90 3.95	50-F2			◎	◎			
55	55X523H	23.5	50	400	20080 22775	5880 6670	1990 1640	10.09 13.89	2.95 4.07	55-01							
	55X543H(*)	24.5	60	400	21625 24285	6335 7110	2090 1735	10.35 14.00	3.03 4.10	55-01							
	55X563H	26.0	40	370	21905 25235	6415 7390	2235 1875	9.80 13.46	2.87 3.94	55-51			◎				

(*)开发中 under developing

R32 1φ 200-240V / 50Hz

X 高效 (低冷凝温度) 空调机 / 宽电压
High-EER (Low Condensing Temp.) Air-Conditioner / Wide Voltage

Testing Condition: ASHRAE/T / NGB

Series	Model	Disp.	Capacitor		Cooling Capacity		Input Power	EER	COP	Outline Drawing	Safety Approval						Testing Condition
		c.c.	μ F	VAC	Btu/h	W	W	Btu/h.W	W/W		C-UL	VPC	TUV	CCC	VDE	Others	
39	WP043S401	4.3	15	370	3605 4045	1055 1185	391 329	9.22 12.29	2.70 3.60	39-90			◎				
	WP065S440	6.5	20	370	6244	1830	505	12.36	3.62	39-89			◎				NGB
44	44X194I	8.6	35	420	7460 8450	2185 2475	785 675	9.50 12.52	2.78 3.67	44-07			◎				
	44X2H4K	12.8	30	370	11150 12540	3265 3670	1155 995	9.65 12.60	2.83 3.69	44-07							
50	50X3J45	17.7	35	400	15275 17020	4475 4985	1555 1270	9.82 13.40	2.88 3.93	50-F3						CB	
	50X4945	22.2	35	450	18925 21270	5545 6230	2010 1640	9.42 12.97	2.76 3.80	50-H5							

(*)开发中 under developing

R32 1φ 100/100-110V 50/60Hz

W 一般 (中冷凝温度) 空调机
General (Medium Condensing Temp.) Air-Conditioner

Testing Condition: ASHRAE/T

Series	Model		Disp.	Capacitor		Cooling Capacity		Input Power	EER	COP	Outline Drawing	Safety Approval						Testing Condition
			c.c.	μ F	VAC	Btu/h	W	W	Btu/h.W	W/W		C-UL	VPC	TUV	CCC	VDE	Others	
35	WM045S540	50Hz	4.5	40	250	3670	1075	520	7.06	2.07	35-88							
		60Hz	4.5	40	250	4540	1330	560	8.11	2.38								
39	39W165G	50Hz	6.25	60	250	5315	1555	590	9.01	2.64	39-06						CB	
		60Hz	6.25	60	250	6410	1875	675	9.50	2.78								
	WP063S501	50Hz	6.25	50	250	5395	1580	660	8.17	2.39	39-84			◎				
		60Hz	6.25	50	250	6550	1915	705	9.29	2.72								
	WP065S570	50Hz	6.5	55	250	5527	1620	605	9.14	2.68	39-89							
		60Hz	6.5	55	250	6722	1970	705	9.53	2.79								
	39W2A5G	50Hz	8.1	60	250	6785	1985	800	8.48	2.48	39-06							
		60Hz	8.1	60	250	8135	2380	885	9.19	2.69								
	39W225G	50Hz	8.6	60	250	7240	2120	845	8.57	2.51	39-06							
		60Hz	8.6	60	250	8770	2570	940	9.33	2.73								
	39W235G	50Hz	9.0	60	250	7580	2220	870	8.71	2.55	39-06							
		60Hz	9.0	60	250	9045	2650	975	9.28	2.72								
44	WZ081S501	50Hz	8.1	70	250	7240	2120	905	8.00	2.34	44-83						CB	
		60Hz	8.1	70	250	8740	2560	950	9.20	2.70								

R32 1φ 115-127V / 60Hz

W 一般 (中冷凝温度) 空调机
General (Medium Condensing Temp.) Air-Conditioner

Testing Condition: ASHRAE/T

Series	Model	Disp.	Capacitor		Cooling Capacity		Input Power	EER	COP	Outline Drawing	Safety Approval					
		c.c.	μ F	VAC	Btu/h	W	W	Btu/h.W	W/W		C-UL	VPC	TUV	CCC	VDE	Others
35	WM048S640	4.75	30	250	4595	1345	550	8.36	2.45	35-80						
39	39W236G	8.6	45	320	8810	2580	935	9.42	2.76	39-06						Inmetro

R32 1φ 115-127V / 60Hz

X 高效 (低冷凝温度)空调机
High-EER (Low Condensing Temp.) Air-Conditioner

Testing Condition: ASHRAE/T / NGB

Series	Model	Disp.	Capacitor		Cooling Capacity		Input Power	EER	COP	Outline Drawing	Safety Approval						
		c.c.	μ F	VAC	Btu/h	W	W	Btu/h.W	W/W		C-UL	VPC	TUV	CCC	VDE	Others	
39	WP063S601	6.25	50	250	6470 7320	1895 2145	700 600	9.24 12.20	2.71 3.58	39-78							Inmetro
	39X1G6G	6.65	50	250	6885 7755	2015 2270	715 605	9.63 12.82	2.82 3.75	39-06							Inmetro

R32 1φ 265V / 60Hz

X 高效 (低冷凝温度) 空调机
High-EER (Low Condensing Temp.) Air-Conditioner

Testing Condition: ASHRAE/T NGB

Series	Model	Disp.	Capacitor		Cooling Capacity		Input Power	EER	COP	Outline Drawing	Safety Approval					
		c.c.	μ F	VAC	Btu/h	W	W	Btu/h.W	W/W		C-UL	VPC	TUV	CCC	VDE	Others
39	39X237G	9.0	20	420	9125 10395	2675 3045	960 810	9.51 12.83	2.79 3.76	39-06	◎					
44	44X307K	11.9	30	420	12600 14145	3690 4145	1250 1060	10.08 13.34	2.95 3.91	44-07	◎					

R32 1φ 230V / 50Hz

X 高效 (低冷凝温度) 空调机
High-EER (Low Condensing Temp.) Air-Conditioner

Testing Condition: ASHRAE/T NGB

Series	Model	Disp.	Capacitor		Cooling Capacity		Input Power	EER	COP	Outline Drawing	Safety Approval					
		c.c.	μ F	VAC	Btu/h	W	W	Btu/h.W	W/W		C-UL	VPC	TUV	CCC	VDE	Others
44	44X239L	10.8	35	370	9325 10320	2730 3025	920 770	10.14 13.40	2.97 3.93	44-07						
	44X2E9K	11.4	35	370	9880 10965	2895 3210	995 820	9.93 13.37	2.91 3.91	44-07						
50	50X3H93	16.9	30	400	14600 16585	4275 4855	1475 1220	9.90 13.59	2.90 3.98	50-F2						
	50X3J96	17.7	30	400	15295 17085	4480 5005	1550 1250	9.87 13.67	2.89 4.00	50-E						
	50X3996	18.2	35	400	15870 17595	4650 5155	1580 1295	10.04 13.59	2.94 3.98	50-E			◎			
55	55X499H	22.5	45	370	19085 21385	5590 6265	1900 1540	10.04 13.89	2.94 4.07	55-51						

R454B 1φ 115V / 60Hz

J 一般 (中冷凝温度) 空调机
General (Medium Condensing Temp.) Air-Conditioner

Testing Condition: ASHRAE/T

Series	Model	Disp.	Capacitor		Cooling Capacity		Input Power	EER	COP	Outline Drawing	Safety Approval					
		c.c.	μ F	VAC	Btu/h	W	W	Btu/h.W	W/W		C-UL	VPC	TUV	CCC	VDE	Others
35	BM030S140	3.0	35	250	3005	880	254	11.83	3.47	35-83						
39	39J131G(*)	5.5	35	250	5120	1500	525	9.75	2.86	39-09	◎					
	39J151G(*)	6.25	35	250	5775	1690	595	9.71	2.84	39-09	◎					
44	44J191G(*)	8.1	60	250	7580	2220	755	10.04	2.94	44-07	◎					
	44J251G(*)	10.3	60	250	9820	2875	970	10.12	2.96	44-07	◎					
	44J311G(*)	12.8	60	250	12240	3585	1230	9.95	2.91	44-07	◎					

(*)开发中 under developing

R454B 1φ 115V / 60Hz

K 高效 (低冷凝温度) 空调机
High-EER (Low Condensing Temp.) Air-Conditioner

Testing Condition: ASHRAE/T NGB

Series	Model	Disp.	Capacitor		Cooling Capacity		Input Power	EER	COP	Outline Drawing	Safety Approval					
		c.c.	μ F	VAC	Btu/h	W	W	Btu/h.W	W/W		C-UL	VPC	TUV	CCC	VDE	Others
39	39K2B1G	9.2	55	250	8570 9405	2510 2755	880 720	9.74 13.06	2.85 3.83	39-06	◎					

R454B 1φ 208-230V / 60Hz

J 一般 (中冷凝温度) 空调机
General (Medium Condensing Temp.) Air-Conditioner

Testing Condition: ASHRAE/T

Series	Model	Disp.	Capacitor		Cooling Capacity		Input Power	EER	COP	Outline Drawing	Safety Approval					
		c.c.	μ F	VAC	Btu/h	W	W	Btu/h.W	W/W		C-UL	VPC	TUV	CCC	VDE	Others
39	39J1B2G(*)	5.0	12	370	4505	1320	465	9.69	2.84	39-09	◎					
	39J162G(*)	6.75	20	370	6270	1835	630	9.95	2.91	39-06	◎					
44	44J192G(*)	8.1	25	370	7520	2200	745	10.09	2.95	44-07	◎					
	44J242G(*)	9.9	20	370	9345	2735	935	9.99	2.93	44-02	◎					
	44J322G(*)	13.2	50	370	12500	3660	1240	10.08	2.95	44-02	◎					

(*)开发中 under developing

R454B 1φ 208-230V / 60Hz

K 高效 (低冷凝温度) 空调机
High-EER (Low Condensing Temp.) Air-Conditioner

Testing Condition: ASHRAE/T NGB

Series	Model	Disp.	Capacitor		Cooling Capacity		Input Power	EER	COP	Outline Drawing	Safety Approval					
		c.c.	μ F	VAC	Btu/h	W	W	Btu/h.W	W/W		C-UL	VPC	TUV	CCC	VDE	Others
39	39K152H	6.25	15	420	5775 6290	1690 1840	580 490	9.96 12.84	2.91 3.76	39-09	◎					
44	44K202G	8.6	25	370	7995 8670	2340 2540	800 680	9.99 12.75	2.93 3.74	44-07	◎					
	44K2G2G	11.1	25	370	10595 11470	3105 3360	1050 870	10.09 13.18	2.96 3.86	44-07	◎					
	44K282G	11.9	30	420	11290 12260	3305 3590	1115 930	10.13 13.18	2.96 3.86	44-07	◎					

R454B 1φ 208-230V / 60Hz

L 北美单元式 (更低冷凝温度) 空调机
US Unitary (Lower Condensing Temp.) Air-Conditioner

Testing Condition: ASHRAE/T CHEER

Series	Model	Disp.	Capacitor		Cooling Capacity		Input Power	EER	COP	Outline Drawing	Safety Approval					
		c.c.	μ F	VAC	Btu/h	W	W	Btu/h.W	W/W		C-UL	VPC	TUV	CCC	VDE	Others
50	50L3829	15.5	40	370	14720 17975	4310 5265	1445 980	10.19 18.34	2.98 5.37	50-04	◎					
	50L4929	20.5	40	370	19365 23905	5670 7000	1920 1280	10.09 18.68	2.95 5.47	50-02	◎					
	50L5129	20.8	40	370	19880 24385	5820 7140	1930 1330	10.30 18.33	3.02 5.37	50-04	◎					
	50L6229	25.8	50	370	24760 30115	7250 8820	2430 1655	10.19 18.20	2.98 5.33	50-12(b)	◎					

R454B 1φ 265V / 60Hz

K 高效 (低冷凝温度) 空调机
High-EER (Low Condensing Temp.) Air-Conditioner

Testing Condition: ASHRAE/T NGB

Series	Model	Disp.	Capacitor		Cooling Capacity		Input Power	EER	COP	Outline Drawing	Safety Approval					
		c.c.	μ F	VAC	Btu/h	W	W	Btu/h.W	W/W		C-UL	VPC	TUV	CCC	VDE	Others
39	39K157G	6.25	15	420	5735 6290	1680 1840	580 490	9.89 12.84	2.90 3.76	39-06	◎					
44	44K2G7G	11.1	25	420	10535 11430	3085 3345	1040 865	10.13 13.21	2.97 3.87	44-07	◎					

R290 1φ 220-240V / 50Hz

P 一般 (中冷凝温度) 空调机
General (Medium Condensing Temp.) Air-Conditioner

Testing Condition: ASHRAE/T

Series	Model	Disp.	Capacitor		Cooling Capacity		Input Power	EER	COP	Outline Drawing	Safety Approval					
		c.c.	μ F	VAC	Btu/h	W	W	Btu/h.W	W/W		C-UL	VPC	TUV	CCC	VDE	Others
35	QM088S301	8.8	15	370	4405	1290	455	9.68	2.84	35-85						
39	QP121S301	12.1	25	420	6170	1805	595	10.37	3.03	39-S			◎			
	QP124S301(*)	12.4	25	370	6390	1870	600	10.65	3.12	39-80						
	QP151S301	15.1	30	370	7762	2275	780	9.95	2.92	39-91			◎	◎		
44	44P163I	12.8	25	420	6745	1975	615	10.97	3.21	44-02			◎	◎		
	44P1H3I	14.4	30	420	7300	2140	675	10.81	3.17	44-02			◎			CB
	QZ156S301	15.6	30	420	8015	2345	775	10.34	3.03	44-76			◎	◎		CB
	44P203I	16.4	25	420	8430	2470	770	10.95	3.21	44-04			◎	◎		CB
	44P213I	16.8	30	420	8630	2525	795	10.86	3.18	44-04			◎			
	44P223I	17.5	30	420	9005	2640	845	10.66	3.12	44-04			◎			
	QZ214S301	21.4	35	370	11050	3235	1010	10.94	3.20	44-84			◎			
	QZ222S301	22.2	40	420	11565	3385	1090	10.61	3.11	44-77			◎			
	QZ228S301	22.8	40	450	11765	3445	1110	10.60	3.10	44-84			◎	◎		
	44P313P	24.0	45	420	11885	3480	1105	10.76	3.15	44-F5			◎	◎		
	44P313Q	24.0	45	420	12240	3585	1165	10.51	3.08	44-F5			◎	◎		
	44P3D3I	26.0	35	420	12915	3780	1210	10.67	3.12	44-F5						
	44P3D3Q	26.0	35	450	13195	3865	1305	10.11	2.96	44-F5			◎			
50	50P4033	30.6	35	400	15695	4595	1380	11.37	3.33	50-09			◎	◎		
	50P4233	32.5	45	420	16705	4890	1475	11.33	3.32	50-09			◎			

(*)开发中 under developing

R410A 1φ 208-230V / 60Hz

A 一般 (中冷凝温度) 空调机
General (Medium Condensing Temp.) Air-Conditioner

Testing Condition: ASHRAE/T

Series	Model	Disp.	Capacitor		Cooling Capacity		Input Power	EER	COP	Outline Drawing	Safety Approval					
		c.c.	μ F	VAC	Btu/h	W	W	Btu/h.W	W/W		C-UL	VPC	TUV	CCC	VDE	Others
39	39A162N	6.75	20	420	6805	1995	740	9.20	2.70	39-76						CB
	39A182I	7.25	25	420	7140	2090	888	8.04	2.35	39-06						KC,CB
	39A1J2I	7.5	25	420	7200	2110	904	7.96	2.33	39-06						KC
44	44A302I	11.9	35	420	11825	3465	1275	9.27	2.72	44-07						CB
50	50A3622	14.4	35	400	14700	4305	1435	10.24	3.00	50-01	◎					
	50A5428	21.4	45	370	21425	6275	2150	9.97	2.92	50-04		◎				
55	55A732H	29.0	40	420	29085	8515	2910	9.99	2.93	55-51	◎	◎				Inmetro
	55A842G	33.0	40	420	33330	9760	3315	10.05	2.94	55-01						Inmetro

R410A 1φ 208-230V / 60Hz

B 高效 (低冷凝温度) 空调机
High-EER (Low Condensing Temp.) Air-Conditioner

Testing Condition: ASHRAE/T / NGB

Series	Model	Disp.	Capacitor		Cooling Capacity		Input Power	EER	COP	Outline Drawing	Safety Approval					
		c.c.	μ F	VAC	Btu/h	W	W	Btu/h.W	W/W		C-UL	VPC	TUV	CCC	VDE	Others
39	39B112G	4.75	15	370	4645 5225	1360 1535	475 400	9.78 13.06	2.86 3.84	39-76						CB,KC
	39B142G	5.75	15	370	5555 6210	1625 1820	565 480	9.83 12.94	2.88 3.79	39-09	◎					CB,KC
	39B152G	6.25	15	400	5970 6705	1750 1970	615 525	9.71 12.77	2.85 3.75	39-09	◎					
	39B1F2G	6.65	15	370	6490 7285	1900 2135	650 550	9.98 13.25	2.92 3.88	39-06						CB
	39B172G	7.0	20	370	6905 7735	2020 2265	695 590	9.94 13.11	2.91 3.84	39-06						CB
	39B202G	8.1	20	370	7855 8770	2300 2570	810 685	9.70 12.80	2.84 3.75	39-06		◎				Inmetro
	39B222G	9.0	25	370	8630 9680	2525 2835	902 769	9.57 12.59	2.80 3.69	39-74						CB

R410A 1φ 208-230V / 60Hz

M 热带T3 (高冷凝温度) 空调机
Tropical T3 (High Condensing Temp.) Air-Conditioner

Testing Condition: ASHRAE/T

Series	Model	Disp.	Capacitor		Cooling Capacity		Input Power	EER	COP	Outline Drawing	Safety Approval					
		c.c.	μ F	VAC	Btu/h	W	W	Btu/h.W	W/W		C-UL	VPC	TUV	CCC	VDE	Others
44	44M262U	10.3	25	370	10140	2970	1000	10.14	2.97	44-06						
	44M2G25	10.55	30	370	10715	3135	1050	10.20	2.99	44-85						
55	55M562H	22.5	35	450	22220	6505	2170	10.24	3.00	55-51						
	55M622H	24.6	35	450	24600	7205	2430	10.12	2.97	55-51						

R410A 1φ 220-240V / 50Hz

A 一般 (中冷凝温度) 空调机
General (Medium Condensing Temp.) Air-Conditioner

Testing Condition: ASHRAE/T

Series	Model	Disp.	Capacitor		Cooling Capacity		Input Power	EER	COP	Outline Drawing	Safety Approval					
		c.c.	μ F	VAC	Btu/h	W	W	Btu/h.W	W/W		C-UL	VPC	TUV	CCC	VDE	Others
39	39A133I	6.9	25	450	5575	1635	703	7.93	2.33	39-06				◎		
	39A143N	7.0	25	370	5775	1690	648	8.91	2.61	39-76			◎			
	39A173N	8.6	25	450	6965	2040	823	8.46	2.48	39-X			◎	◎		
44	44A233I	11.4	35	450	9445	2765	1015	9.31	2.72	44-82			◎	◎		
	44A243I	11.9	35	450	9820	2875	1100	8.93	2.61	44-07			◎	◎		
	44A253I	12.4	35	450	10275	3010	1125	9.13	2.68	44-07			◎	◎		
55	55A603G	29.0	40	400	23810	6970	2370	10.05	2.94	55-51				◎		

R410A 1φ 220-240V / 50Hz

B 高效 (低冷凝温度) 空调机
High-EER (Low Condensing Temp.) Air-Conditioner

Testing Condition: ASHRAE/T / NGB

Series	Model	Disp.	Capacitor		Cooling Capacity		Input Power	EER	COP	Outline Drawing	Safety Approval					
		c.c.	μ F	VAC	Btu/h	W	W	Btu/h.W	W/W		C-UL	VPC	TUV	CCC	VDE	Others
39	39B1G3I	8.45	25	450	6785 7660	1985 2245	802 703	8.46 10.90	2.48 3.19	39-06						
44	44B263K	13.2	35	370	11030 12185	3230 3570	1090 905	10.12 13.46	2.96 3.94	44-07			◎	◎		
	44B273K	13.5	40	370	10990 12200	3220 3575	1110 940	9.90 12.98	2.90 3.80	44-07			◎			
50	50B4035	19.2	35	370	15755 17850	4615 5225	1585 1310	9.94 13.63	2.91 3.99	50-03			◎			
	50B4338	20.8	35	400	17060 19300	4995 5655	1705 1405	10.01 13.74	2.93 4.02	50-04				◎		

R410A 1φ 220-240V / 50Hz

M 热带T3 (高冷凝温度) 空调机
Tropical T3 (High Condensing Temp.) Air-Conditioner

Testing Condition: ASHRAE/T

Series	Model	Disp.	Capacitor		Cooling Capacity		Input Power	EER	COP	Outline Drawing	Safety Approval					
		c.c.	μ F	VAC	Btu/h	W	W	Btu/h.W	W/W		C-UL	VPC	TUV	CCC	VDE	Others
44	44M2532	12.4	35	370	10160	2975	1025	9.91	2.90	44-G7						
	44M2H3G	14.0	30	370	11470	3360	1175	9.76	2.86	44-H8						CB
55	55M563H	27.0	40	400	22220	6505	2200	10.10	2.96	55-51						CB
	55M603H	29.0	40	400	24125	7065	2450	9.85	2.88	55-51						

直流变频除湿机

Dc Inverter Application

轻巧尺寸易于置入产品 / 针对除湿机专用应用工况设计 / 低GWP高效环保冷媒
高效率泵体设计 / 低噪音振动 / 高可靠度 / 可对应全球电源范围 / 符合全球各区域安规认证需求

Lightweight and easy to put in the product / Specific designed for dehumidifier application
Low GWP high efficiency environmentally friendly refrigerant / High efficiency pump design / Low noise and vibration
Great reliability / Compatible with global power supply range / Meet the requirements of safety certification in the world

R32 单缸直流变频 DC Inverter Single Cylinder

除湿机 Dehumidifier

Testing Condition: ASHRAE/T

Series	Model	Disp.	Cooling Capacity		Input Power (Inverter Included)	Input Power (Inverter Excluded)	COP (Inverter Included)	COP (Inverter Excluded)	Outline Drawing	Safety Approval					
		c.c.	Btu/h	W	W	W	W/W	W/W		C-UL	VPC	TUV	CCC	VDE	Others
35	WM065SJ73	6.5	7685	2250	571	536	3.94	4.20	35-N						

R134a 双缸直流变频 DC Inverter Twin Cylinder

除湿机 Dehumidifier

Testing Condition: ASHRAE/T

Series	Model	Disp.	Cooling Capacity		Input Power (Inverter Included)	Input Power (Inverter Excluded)	COP (Inverter Included)	COP (Inverter Excluded)	Outline Drawing	Safety Approval					
		c.c.	Btu/h	W	W	W	W/W	W/W		C-UL	VPC	TUV	CCC	VDE	Others
32	ES075TJ70	7.5	3585	1050	330	312	3.18	3.37	32-01						
36	EM092TJ72	9.2	4465	1305	415	385	3.14	3.39	35-78						
	36E12M1	10.2	4880	1430	465	430	3.08	3.33	36-S3						

定频除湿机

Single Speed Dehumidifier Application

轻巧尺寸易于置入产品 / 针对除湿机专用应用工况设计 / 低GWP高效环保冷媒
高效率泵体设计 / 低噪音振动 / 高可靠度 / 可对应全球电源范围 / 符合全球各区域安规认证需求

Lightweight and easy to put in the product / Specific designed for dehumidifier application
Low GWP high efficiency environmentally friendly refrigerant / High efficiency pump design / Low noise and vibration
Great reliability / Compatible with global power supply range / Meet the requirements of safety certification in the world

R32 1φ 115V / 60Hz

Y 北美DOE除湿机
US DOE Dehumidifier

Testing Condition: ASHRAE/T / NDOE

Series	Model	Disp.	Capacitor		Cooling Capacity		Input Power	EER	COP	Outline Drawing	Safety Approval						Testing Condition
		c.c.	μ F	VAC	Btu/h	W	W	Btu/h.W	W/W		C-UL	VPC	TUV	CCC	VDE	Others	
35	WM034S101	3.35	25	250	3992	1170	232	17.20	5.04	35-26	◎						NDOE
	35Y0K1I	3.5	25	250	3215 4145	940 1215	440 243	7.31 17.06	2.14 5.00	35-25	◎						
	35Y091P	3.5	25	250	3410 4125	1000 1210	413 247	8.26 16.70	2.42 4.90	35-64	◎						
	WM043S140	4.25	35	250	5169	1515	285	18.14	5.32	35-64	◎						NDOE
	35Y1B1H	4.4	25	250	4165 5415	1220 1585	480 285	8.68 19.00	2.54 5.56	35-65	◎						
	35Y121G	4.5	35	250	4545	1330	490	9.28	2.71	35-66	◎						ASHRAE/T
	35Y1C1Q	4.75	40	250	4605 5855	1350 1715	532 326	8.66 17.96	2.54 5.26	35-65	◎						
	35Y1C1M	4.75 4.75	25 25	250 250	4285 5795	1255 1695	550 305	7.79 18.99	2.28 5.56	35-69	◎						
	WM048S140	4.75	40	250	5855	1715	315	18.71	5.48	35-70	◎						NDOE
39	39Y141I	5.25	45	250	5455 6545	1600 1915	598 370	9.12 17.69	2.68 5.18	39-76	◎						
	WP063S102	6.25	40	250	1957	2275	409	4.78	5.56	39-A4	◎						NDOE
	WP067S101	6.65	40	250	2098	2440	442	4.75	5.52	39-A4	◎						NDOE

R290 1φ 115V / 60Hz

P 一般(中冷凝温度) 除湿机
General (Medium Condensing Temp.) Dehumidifier

Testing Condition: ASHRAE/T

Series	Model	Disp.	Capacitor		Cooling Capacity		Input Power	EER	COP	Outline Drawing	Safety Approval						Testing Condition
		c.c.	μ F	VAC	Btu/h	W	W	Btu/h.W	W/W		C-UL	VPC	TUV	CCC	VDE	Others	
35	QM038S101	3.75	35	250	2370	694	201	11.79	3.45	35-71						CB	NGB
	35P061H	4.25	30	250	2540	745	241	10.54	3.09	35-35		◎					
	35P071H	4.75	30	250	2875	840	275	10.45	3.05	35-35		◎					
	QM060S170	6.0	30	400	3860	1130	296	13.04	2.69	35-81							NGB

R290 1φ 220-240V / 50Hz

P 一般(中冷凝温度) 除湿机
General (Medium Condensing Temp.) Dehumidifier

Testing Condition: ASHRAE/T

Series	Model	Disp.	Capacitor		Cooling Capacity		Input Power	EER	COP	Outline Drawing	Safety Approval					
		c.c.	μ F	VAC	Btu/h	W	W	Btu/h.W	W/W		C-UL	VPC	TUV	CCC	VDE	Others
35	35P0E3M	3.5	8	400	1645	480	217	7.58	2.21	35-06(b)			◎			
	35P0G3J	5.25	10	450	2580	755	260	9.92	2.90	35-64			◎	◎		CB
	35P0G3K	5.25	7	450	2520	740	278	9.06	2.66	35-02(b)			◎	◎		CB
	35P073I	5.5	12	370	2700	790	294	9.18	2.69	35-55			◎	◎		
	35P093I	7.5	20	400	3730	1090	430	8.67	2.53	35-15			◎	◎		
	35P113I	8.8	20	400	4405	1290	524	8.41	2.46	35-A6			◎	◎		
39	QP119S301	11.9	30	370	6170	1805	641	9.63	2.82	39-A1			◎	◎		

R314a 1φ 115V / 60Hz

H 高效(低冷凝温度)除湿机
High-EER (Low Condensing Temp.) Dehumidifier

Testing Condition: ASHRAE/T / NGB

Series	Model	Disp.	Capacitor		Cooling Capacity		Input Power	EER	COP	Outline Drawing	Safety Approval						Testing Condition
		c.c.	μ F	VAC	Btu/h	W	W	Btu/h.W	W/W		C-UL	VPC	TUV	CCC	VDE	Others	
35	EM033S171	3.25	15	250	1350 1415	395 415	143 120	9.44 11.79	2.76 3.46	35-87							
	EM050S171	5.0	30	250	2415 2575	710 755	229 201	10.55 12.81	3.10 3.76	35-82							
	EM060S140	6.0	25	250	3090	905	235	13.14	3.85	35-86							NGB
	EM073S170	7.25	25	370	3700	1083	274	13.50	3.95	35-84							NGB

R134a 1φ 208-230V / 60Hz

H 高效(低冷凝温度)除湿机
High-EER (Low Condensing Temp.) Dehumidifier

Testing Condition: ASHRAE/T / NGB

Series	Model	Disp.	Capacitor		Cooling Capacity		Input Power	EER	COP	Outline Drawing	Safety Approval					
		c.c.	μ F	VAC	Btu/h	W	W	Btu/h.W	W/W		C-UL	VPC	TUV	CCC	VDE	Others
35	35H0F2F	4.75	5	400	2300 2430	675 710	233 206	9.87 11.80	2.90 3.45	35-34			◎			KC
	35H072C	6.0	6	400	2720 2895	795 850	280 240	9.71 12.06	2.84 3.54	35-01						
	35H0H2B	6.5	10	370	3075 3215	900 940	305 270	10.08 11.91	2.95 3.48	35-04		◎				CB,KC
	35H082B	6.75	10	370	3215 3410	940 1000	300 257	10.72 13.27	3.13 3.89	35-15						CB,KC
	35H092C	7.5	6	450	3490 3730	1025 1090	320 273	10.91 13.66	3.20 3.42	35-55						KC

R134a 1φ 100/100-110V 50/60Hz

E 一般 (中冷凝温度) 除湿机
General (Medium Condensing Temp.) Air-Conditioner

Testing Condition: ASHRAE/T

Series	Model		Disp.	Capacitor		Cooling Capacity		Input Power	EER	COP	Outline Drawing	Safety Approval						Testing Condition
			c.c.	μ F	VAC	Btu/h	W	W	Btu/h.W	W/W		C-UL	VPC	TUV	CCC	VDE	Others	
35	35E0F5I	50Hz 60Hz	4.75	30	250	1865 2260	545 660	250 277	7.46 8.16	2.18 2.38	35-33							
	35E105G	50Hz 60Hz	8.8	40	250	3430 4105	1005 1205	355 393	9.67 10.45	2.83 3.06	35-72							CB
	EM035S501	50Hz 60Hz	3.5	25	250	1300 1610	380 471	173 191	7.51 8.43	2.20 2.47	35-73							
	EM065S570	50Hz 60Hz	6.5	30	250	2565 3015	751 883	258 293	9.94 10.29	2.91 3.01	35-74							CB

工作/测试工况；接线图

Working / Testing Condition ; Wiring Diagram

工作 / 测试工况 Working / Testing Condition

	冷凝温度 ℃ Condensing temp	蒸发温度 ℃ Evaporating temp	膨胀阀前温度 ℃ Liquid temp	吸入温度 ℃ Suction temp	环境温度 ℃ Ambient temp
ASHRAE/T	54.4	7.2	46	35	35
NGB	46	7.2	37.7	18.3	35
TBA	42.3	2.7	34.3	12.8	35
CHEER	37.8	7.2	29.5	18.3	35
HPD	70	25	61	35	35
HPWH	60	10	50	20	35
NDOE	32	5	25	18	35

接线图 Wiring Diagram

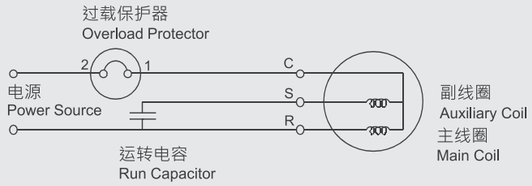

▶ 定速压缩机 Single Speed Compressor

型式 1 : 外置式保护器

Type 1 : External Overload Protector

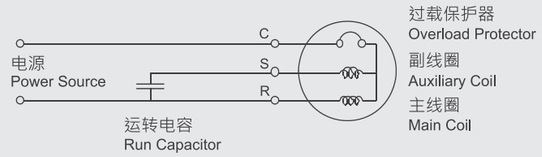

▶ 定速压缩机 Single Speed Compressor

型式 2 : 内置式保护器

Type 2 : Internal Overload Protector

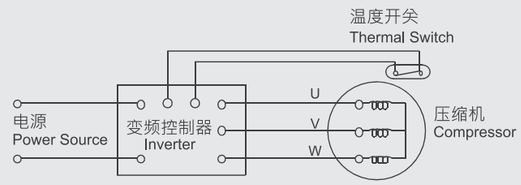

▶ 直流变频压缩机 DC Inverter Compressor

型式 1 : 温度开关

Type 1 : Thermal Switch

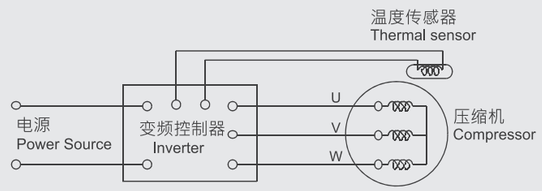

▶ 直流变频压缩机 DC Inverter Compressor

型式 2 : 温度传感器

Type 2 : Thermal Sensor

外观图

Outline Drawing

35-01,02,04,06,33,34,35,36,73,87

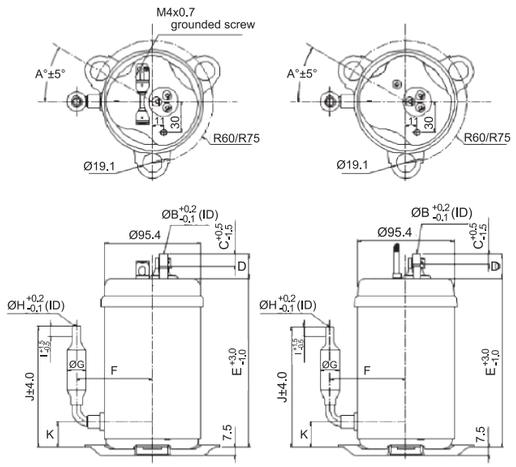

35-14,15,16,24,25,26, 53,54,55,56,63,64,65,66,67,75,78,79,83,85 02(b),06(b)

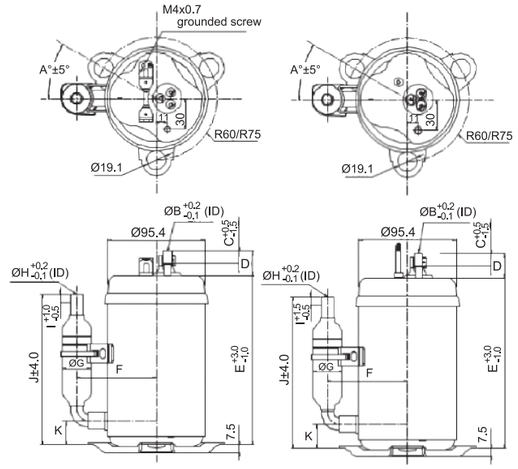

35-N,X,76

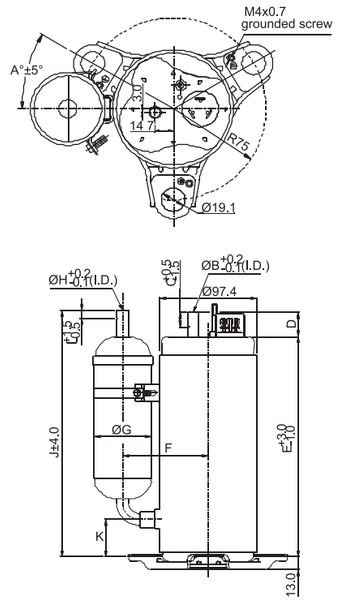

36-S1

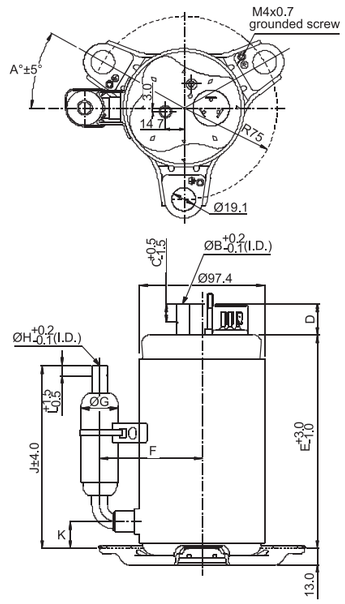

35-68,69,70,71,72,74,80,81,82,84,86,88

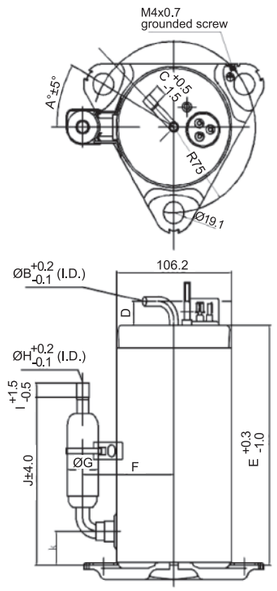

36-01

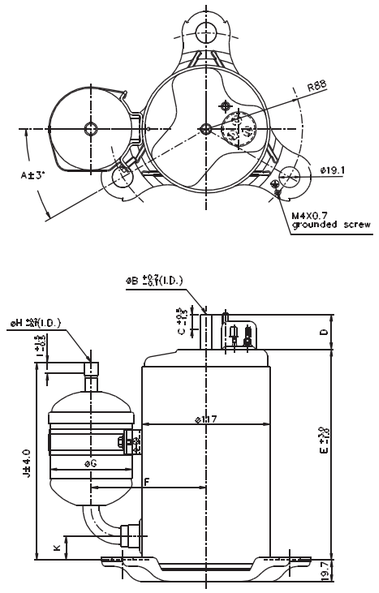

39-A1,A2,A3,A4

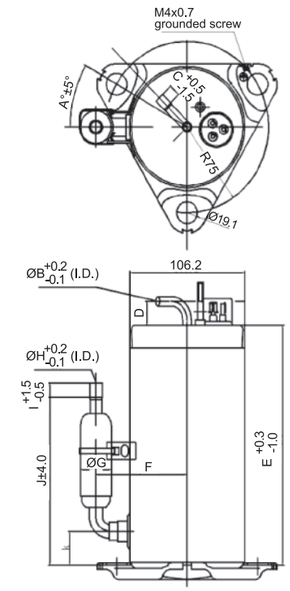

40-03,08

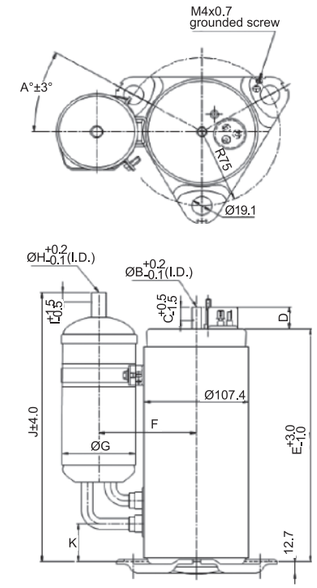

39-01,02,04,06,08,09, 26,28,52,65,74,75,76,77,78,80, 81,82,83,84,85,86,87,89,91,92

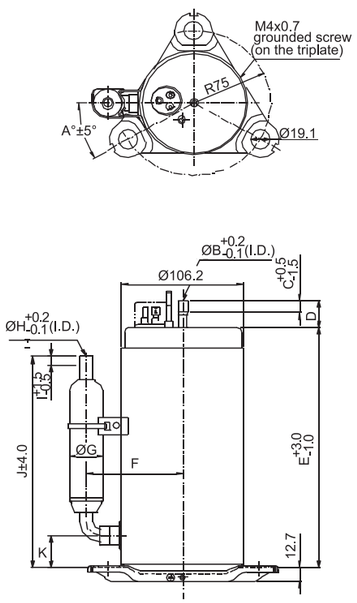

39-Q,R,S,T,U,V,W,X,Y,Z,Z1,88,90,93

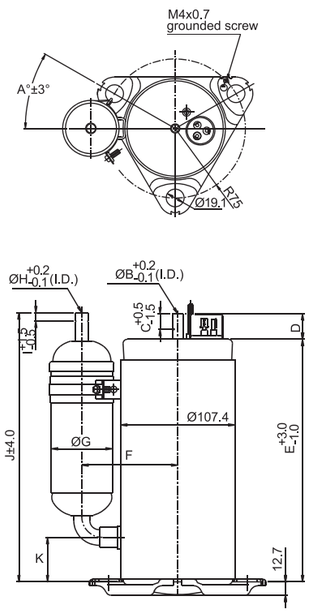

44-02,04,05,06,07, 56,73,75,76,77,A3,80,83,84,85,87,89

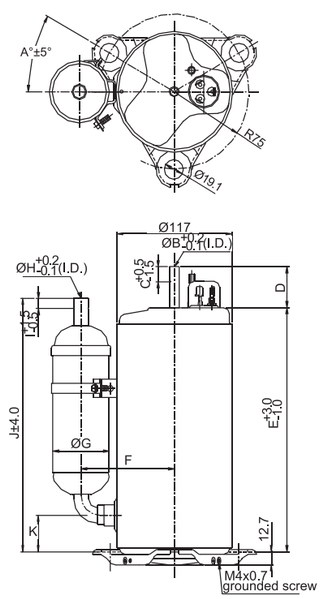

44-Z,86

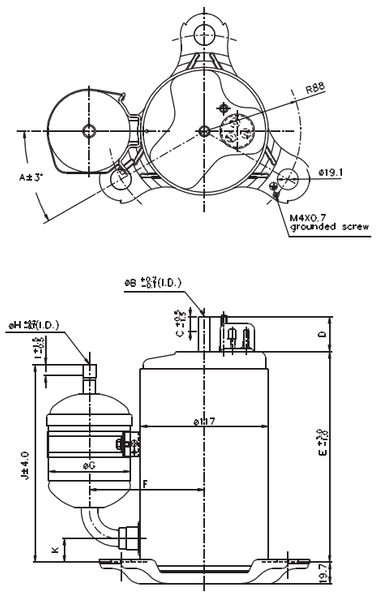

44-A1,K3,78,79,80,81

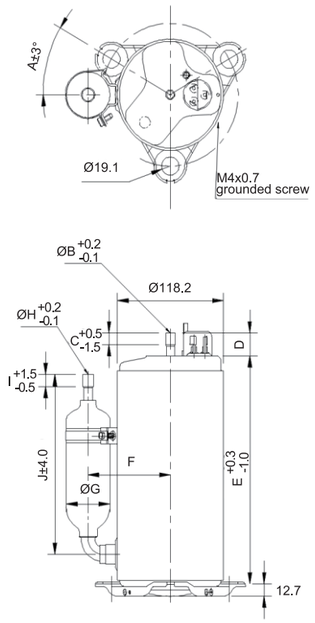

44-A2

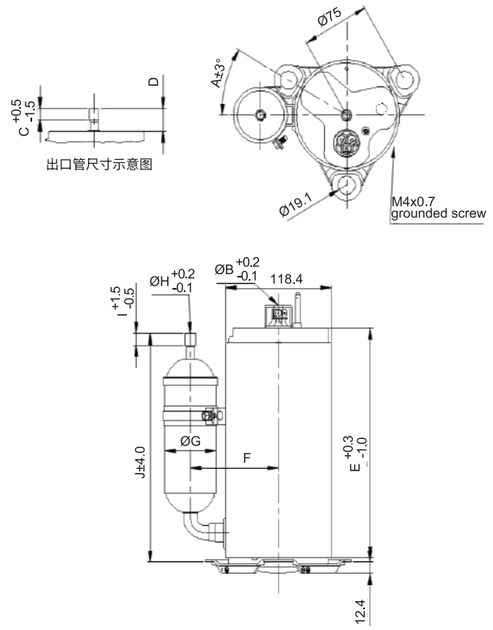

50-12(b)

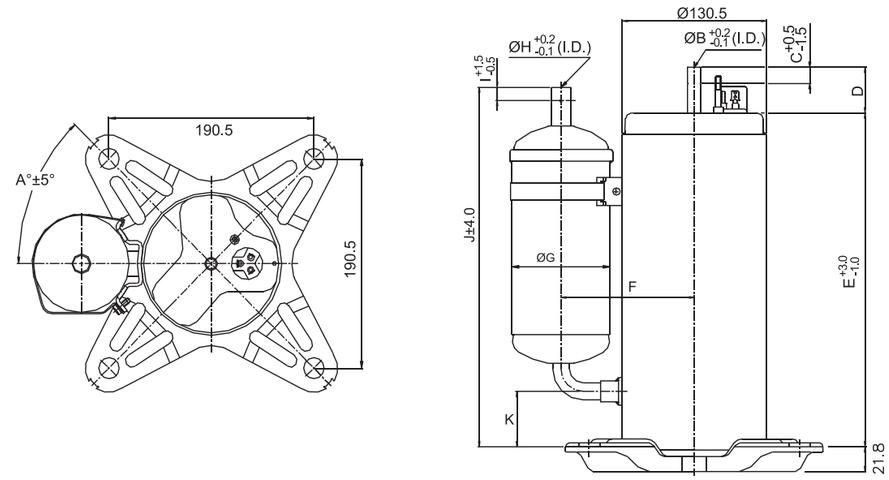

45-03,05

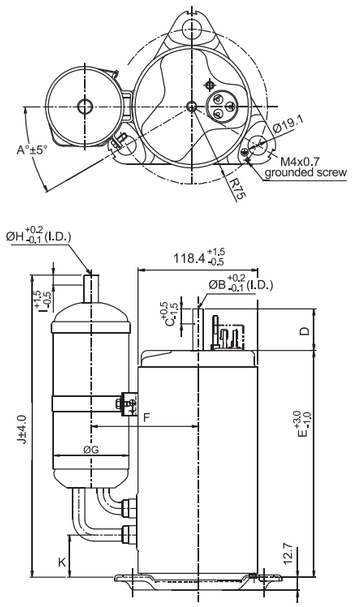

50-01,02,03,04,05,06,07,55

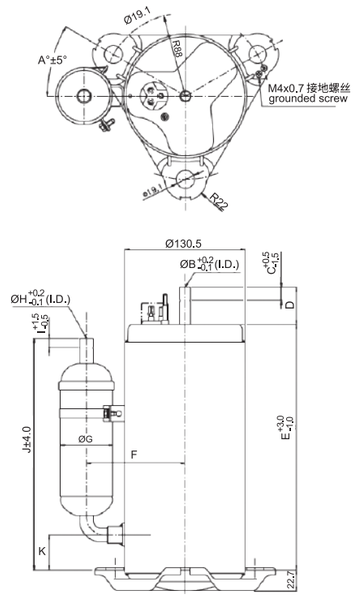

55-01,51

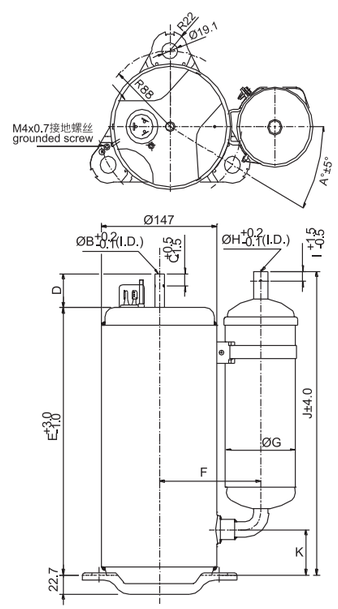

55-51(b)

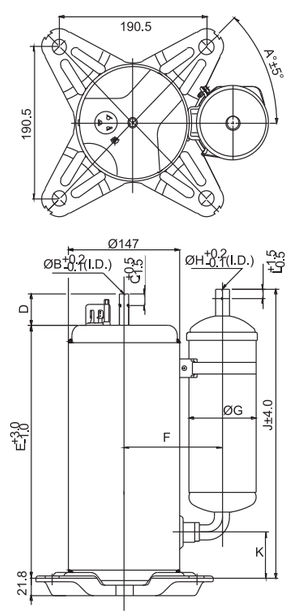

3H-46,47

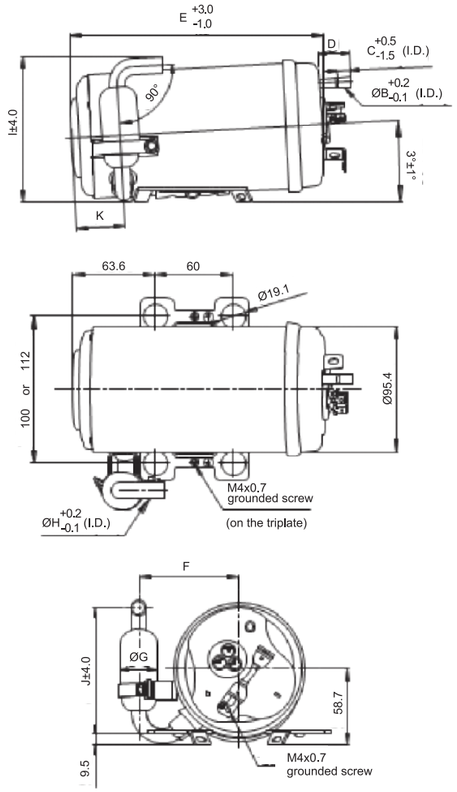

3L-42

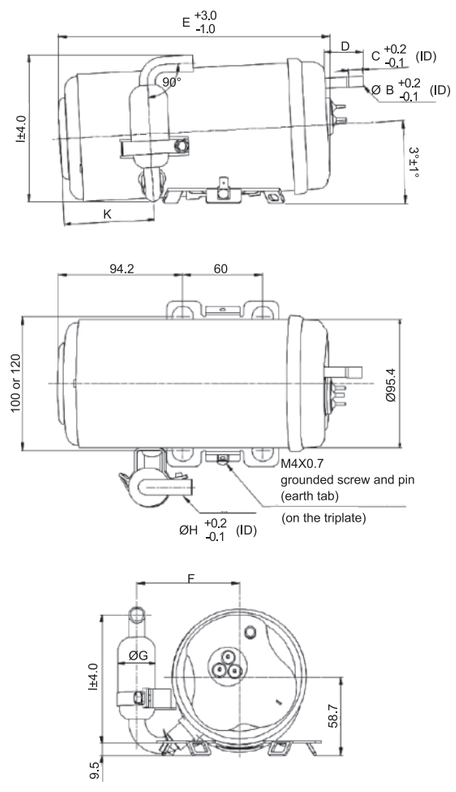

4M-01

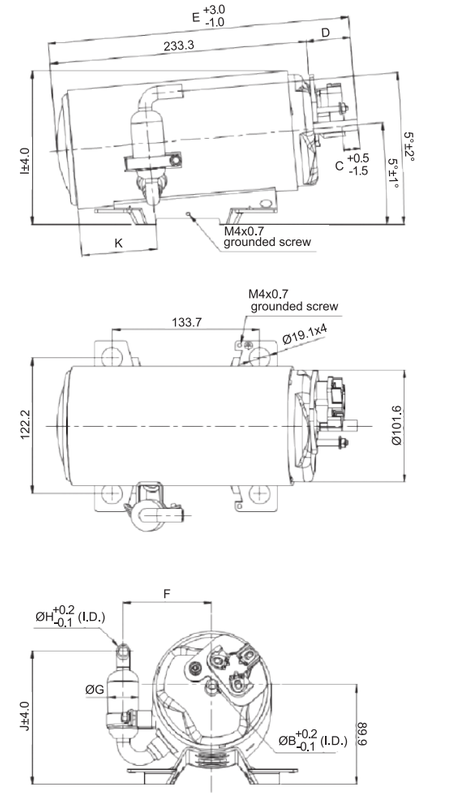

21-01

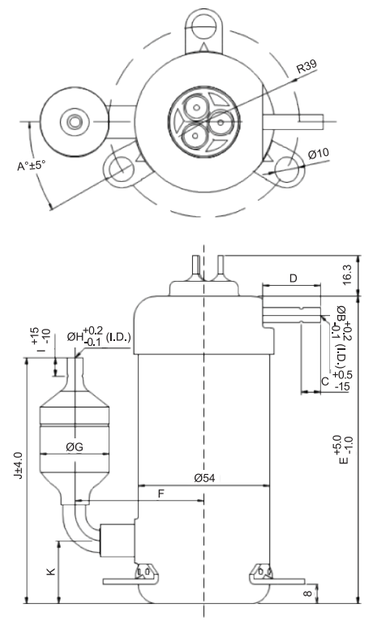

20-01,02

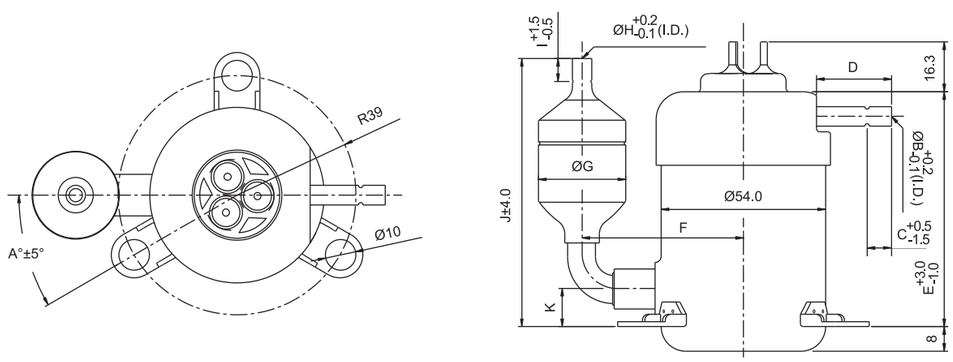

31-01,02,03

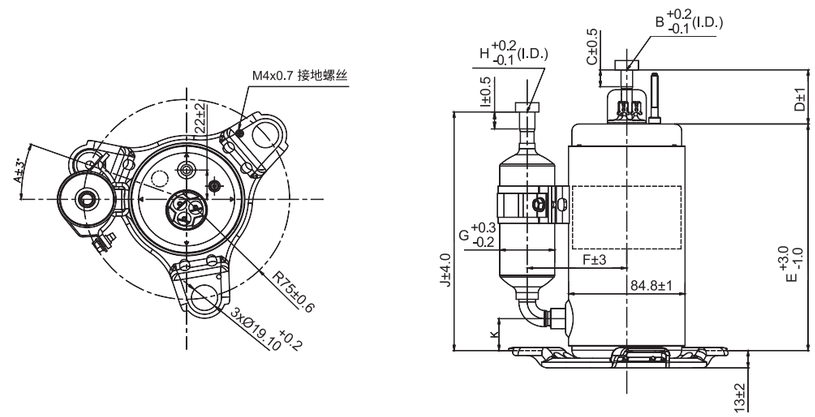

外观图尺寸

Dimensions Table for Outline Drawing

Fig. NO.	A	B	C	D	E	F	G	H	I	J	K
20-01	-30	4.35/6.50	8	23.7	76.6	53	28	4.35/6.50	7.5	87.5	12.5
20-02	30	6.35	16.3	27	126	53	28.6	6.35	-	100.5	25.5
21-01	-30	4.35/6.50	8	23.7	126	53	28	4.35/6.50	7.5	100.5	25.5
31-01	20	6.2	12.5	40.6	170	72.5	40	9.2	12.5	179	24
31-02	30	6.2	10.5	24.3/40	156.7	72.5	28.6	9.7	8	144.7	24
31-03	30	6.2	12.5	24.3/40	178	76	40	9.7	12.5	192	28
35-01	±30/60	6.0/6.5	10.5/12	24	165.6	75	19	6.5/8.1	10	118.3	25.5
35-02, 35-02(b)	±30/60	6.0/6.5	10.5/12	24	155.6	75	19	6.5/8.1	10	118.3	25.5
35-04	±30/60	6.0/6.5	10.5/12	24	175.6	75	19	6.5/8.1	10	118.3	25.5
35-06, 35-06(b)	±30/60	6.0/6.5	10.5/12	24	145.6	75	19	6.5/8.1	10	118.3	25.5
35-14	±30/60	6.0/6.5	10.5/12	24	165.6	78.6	28.6	9.7	8	149.5	25.5
35-15	±30/60	6.0/6.5	10.5/12	24	175.6	78.6	28.6	9.7	8	149.5	25.5
35-16	±30/60	6.0/6.5	10.5/12	24	185.6	78.6	28.6	9.7	8	149.5	25.5
35-24	±30/60	6.0/6.5	10.5/12	24	165.6	78.6	28.6	9.7	8	150.5	26.5
35-25	±30/60	6.0/6.5	10.5/12	24	175.6	78.6	28.6	9.7	8	150.5	26.5
35-26	±30/60	6.0/6.5	10.5/12	24	185.6	78.6	28.6	9.7	8	150.5	26.5
35-33	±30/60	6.0/6.5	10.5/12	24	155.6	75	19	6.5/8.1	10	116.3	23.5
35-34	±30/60	6.0/6.5	10.5/12	24	165.6	75	19	6.5/8.1	10	116.3	23.5
35-35	±30/60	6.0/6.5	10.5/12	24	175.6	75	19	6.5/8.1	10	116.3	23.5
35-36	±30/60	6.0/6.5	10.5/12	24	185.6	75	19	6.5/8.1	10	116.3	23.5
35-53	±30/60	6.0/6.5	10.5/12	24	160.6	78.6	28.6	9.7	8	149.5	25.5
35-54	±30/60	6.0/6.5	10.5/12	24	170.6	78.6	28.6	9.7	8	149.5	25.5
35-55	±30/60	6.0/6.5	10.5/12	24	180.6	78.6	28.6	9.7	8	149.5	25.5
35-56	±30/60	6.0/6.5	10.5/12	24	190.6	78.6	28.6	9.7	8	149.5	25.5
35-63	±30/60	6.0/6.5	10.5/12	24	160.6	78.6	28.6	9.7	8	150.5	26.5
35-64	±30/60	6.0/6.5	10.5/12	24	170.6	78.6	28.6	9.7	8	150.5	26.5
35-65	±30/60	6.0/6.5	10.5/12	24	180.6	78.6	28.6	9.7	8	150.5	26.5
35-66	±30/60	6.0/6.5	10.5/12	24	190.6	78.6	28.6	9.7	8	150.5	26.5
35-67	30	6.5	12	21	178.1	78.6	28.6	9.7	8	143	19
35-68	30	6.5	12	21	176.4	78.6	28.6	9.7	8	146.3	22.3
35-69	30	6.2	12	21	185.6	78.6	28.6	8.1	12.5	155	26.5
35-70	15	6.5	12	21	176.4	78.6	28.6	9.7	8	146.3	22.3
35-71	30	6.5	12	21	147.5	78.6	28.6	8.1	12.5	183.1	19
35-72	30	6.5	12	21	178.1	78.6	28.6	8.1	12.5	149.8	21.3

Fig. NO.	A	B	C	D	E	F	G	H	I	J	K
35-73	60	6.5	12	24.4	143.1	65	19	6.5	10	129.8	16
35-74	30	6.5	12	21	158.1	78.6	28.6	9.7	8	142	18
35-75	30	6.5	12	24.3	186.3	78.6	28.6	9.7	8	146.3	22.3
35-76	20	6.2	10.5	24.3/40	188.7	82.6	40	9.2	12.5	197.3	33.3
35-78	60	8.1	12.5	24.3/40	186.4	72.7	28.6	9.7	8	168	44
35-79	30	8.1	12.5	24.3/40	174.4	78.6	28.6	9.7	8	156	32
35-80	30	6.5	12	21	183.1	78.6	28.6	8.1	12.5	147.5	19
35-81	30	6.5	12	21	183.1	78.6	28.6	8.1	12.5	142	18
35-82	30	6.5	12	21	176.5	78.6	28.6	8.1	12.5	155	26.5
35-83	15/60	6.5	12	24.4	186.4	78.6	28.6	9.7	8	146.3	13
35-84	15	6.5	12	21	181.4	78.6	28.6	8.1	12.5	149.8	21.3
35-85	45	6.5	12	24.3/40	191.2	81.5	40	9.7	12.5	197.25	22.25
35-86	30	6.5	12	21	191.4	78.6	28.6	9.7	8	146.3	22.3
35-87	30	6.5	12	24	153.1	71	20	8.5	12	138.3	16
35-88	60	6.5	12	21	178.1	78.6	28.6	9.7	8	143	19
35-N	±30/60	8.1	14.5	24.3/40	224.7	85.1	57.3	9.7	8	251.3	38.3
36-01	30	8.1	12.5	24.3/40	214.7	87.7	57.3	9.7	12.5	227.3	47.3
35-X	±30/60	6.0/6.5	10.5/12	24	199.7	90.9	64	6.5/8.1	10	254.8	33.3
3H-46	—	6.0/6.5	10.5/12.0	24	194.7	77.2	28.6	9.7	111	95.6	37.5
3H-47	—	8.1	12.5	24.3/40	200.9	82.2	19	9.7	12.5	157.7	—
3L-42	—	6.0/6.5	10.5/12.0	24.3	204.7	77.2	28.6	9.7	109.5	95.6	68.1
36-S1	±30/60	8.1	14.5	24.4/40	189.7	79.6	28.6	9.7	8	171.3	47.3
39-01	±30/60	6.5/8.1	10.5/14.5	24.3/40	220.3	84	28.6	9.7	8	193.5	29.5
39-02	±30/60	6.5/8.1	10.5/14.5	24.3/40	192.9	84	28.6	9.7	8	153.5	29.5
39-04	±30/60	6.5/8.1	10.5/14.5	24.3/40	202.9	84	28.6	9.7	8	153.5	29.5
39-06	±30/60	6.5/8.1	10.5/14.5	24.3/40	220.3	84	28.6	9.7	8	191	27
39-08	±30/60	6.5/8.1	10.5/14.5	24.3/40	198.9	84	28.6	9.7	8	151	27
39-09	±30/60	6.5/8.1	10.5/14.5	24.3/40	209.9	84	28.6	9.7	8	191	27
39-26	±30/60	6.5/8.1	10.5/14.5	24.3/40	189.9	84	28.6	9.7	8	151	27
39-28	±30/60	6.5/8.1	10.5/14.5	24.3/40	169.9	84	28.6	9.7	8	151	27
39-52	±30/60	6.5/8.1	10.5/14.5	24.3/40	169.9	84	28.6	9.7	8	151	27
39-65	±30/60	6.5/8.1	10.5/14.5	24.3/40	220	84	28.6	9.7	8	153.5	29.5
39-74	±30/60	6.5/8.1	10.5/14.5	24.3/40	232	87	40	9.7	8	191	27
39-75	±30/60	6.5/8.1	10.5/14.5	24.3/40	235.9	90	57.3	9.7	8	257.5	44.5

Fig. NO.	A	B	C	D	E	F	G	H	I	J	K
39-76	±30/60	6.5/8.1	10.5/14.5	24.3/40	209.9	84	28.6	9.7	8	151/191	22
39-77	-15	6.5/8.1	12.5	24.3/40	209.9	84	28.6	9.7	12.5	194	22
39-78	±30/60	6.5/8.1	10.5/14.5	24.3/40	209.9	87	40	9.7	12.5	194	22
39-80	±30/60	6.5/8.1	10.5/14.5	24.3/40	220.3	87	40	9.7	12.5	199	27
39-81	±30/60	6.5/8.1	10.5/14.5	24.3/40	209.9	84	28.6	9.7	12.5	194	22
39-82	±27/60	6.5/8.1	10.5/14.5	24.3/40	197.8	87	40	9.7	12.5	269	22
39-83	±30/60	6.5	10.5	24.3	199.9	84	28.6	9.7	8	146	22
39-84	±30/60	8.1	12.5	24.3	209.9	87	40	9.7	12.5	194	22
39-85	15	6.2	10.5	24.3	209.9	76.5	28.6	8.1	12.5	199	27
39-86	29	8.1	12.5	24.3	209.9	87	40	9.7	12.5	214	22
39-87	15	6.5	10.5	24.3	199.9	76.5	28.6	9.7	12.5	194	22
39-88	30	8.1	12.5	24.3	226.9	87	40	9.7	12.5	199	27
39-89	0/30	6.5	10.5	24.3	209.9	84	28.6	9.7	12.5	194	22
39-90	27	8.1	12.5	35	197.8	87	40	9.7	12.5	269	22
39-91	30	8.1	12.5	24.3	226.9	88.5	40	9.7	12.5	201.5	29.5
39-92	30	6.5	10.5	24.3	200.3	84	28.6	9.7	8	146	22
39-93	30	8.1	12.5	24.3/40	204.8	96	64	9.2/9.7	12.5	255.3	33.3
39-Q	±30/60	6.5/8.1	10.5/14.5	24.3/40	230	90	57.3	9.7	8	255	42
39-R	±30/60	6.2	10.5/14.5	24.3/40	220.3	87	40	8.1	12.5	199	27
39-S	±30/60	6.5/8.1	10.5/14.5	24.3/40	226.9	87	40	9.7	12.5	201.5	29.5
39-T	±30/60	6.5/8.1	10.5/14.5	24.3/40	222.2	95.7	64	12.8	10	244.6	63.6
39-U	±30/60	6.5/8.1	10.5/14.5	24.3/40	222.2	95.7	64	12.8	10	244.6	63.6
39-V	±30/60	6.5/8.1	10.5/14.5	24.3/40	191.7	95.4	64	9.7	12.5	214.4	33.3
39-W	±30/60	6.5/8.1	10.5/14.5	24.3/40	204.9	95.4	64	9.7	12.5	255.3	33.3
39-X	±30/60	6.5/8.1	10.5/14.5	24.3/40	215	86	48	12.8	10	211	27
39-Y	±30/60	6.5/8.1	10.5/14.5	24.3/40	222.2	95.7	64	12.8	10	244.6	63.6
39-Z	±30/60	6.5/8.1	10.5/14.5	24.3/40	193	84.6	28.6	9.7	8	151	27
39-Z1	±30/60	6.5/8.1	10.5/12.5	24.3/40	204.8	96	64	9.7	12.5	255.3	33.3
39-A1	±30/60	6.5/8.1	—	21	209.9	84	40	9.7	12.5	130	29.5
39-A2	±30/60	6.5	—	21	209.9	87	40	9.7	12.5	194	22
39-A3	±30/60	6.5	10.5	21	220	84	28.6	9.7	8	191	27
39-A4	15	6.5	10.5	21	220.3	87	40	9.7	12.5	199	27

Fig. NO.	A	B	C	D	E	F	G	H	I	J	K
40-03	±30/60	6.5/8.1	10.5/14.5	24.3/40	253.2	100.4	75	12.8	10	292.9	40.9
40-08	±30/60	6.5/8.1	10.5/14.5	24.3/40	223.2	100.4	75	12.8	10	262.9	30.9
4M-01	—	6.5/8.1	14.5	24/40	273.3	80.5	28.6	9.7	138.2	120.4	64.1
44-02	±30/60	8.1	14.5	24/40	239.8	91	48	9.7	8	248.8	35.8
44-04	±30/60	8.1	14.5	24/40	244.8	91	48	9.7	8	248.8	35.8
44-05	±30/60	8.1	14.5	24/40	249.8	91	48	9.7	8	248.8	35.8
44-06	±30/60	8.1	14.5	24/40	249.8	94.9	57.3	12.8	10	280.8	45.8
44-07	±30/60	8.1	14.5	24/40	239.8	91	48	9.7	8	207.4	23.4
44-56	±30/60	8.1	14.5	24/40	235	91.6	48	12.8	10	219.8	35.8
44-73	±30/60	8.1	14.5	24/40	260	94.9	57.3	9.7	8	258.8	35.8
44-75	±30/60	6.2	10.5	40.6	249.8	98.7	57.3	8.1	12.5	244.1	31.1
44-76	±30/60	8.1	12.5	24.3	224.8	92.4	40	9.7	12.5	203.1	31.1
44-77	±30/60	8.1	14.5	24/40	244.8	91	48	9.7	12.5	224.8	35.8
44-78	30	8.1	12.5	24.3	240.1	93.1	48	9.7	12.5	220.4	31.4
44-79	30	8.1	12.5	24.3	250.1	93.1	48	9.7	12.5	249.4	31.4
44-80	30	8.1	12.5	24.3	240.1	92.5	48	9.7	12.5	220.4	31.4
44-81	30	6.5/8.1	10.5/12.5	24.3	250.1	97.8	57.3	8.1/9.7	12.5	244.3	31.4
44-82	30	8.1	12.5	24.3	249.8	92.5	48	9.7	12.5	220.1	31.1
44-83	30	8.1	12.5	24.3	240.1	92.5	48	9.7	12.5	220.4	31.4
44-84	30	8.1	12.5	24.3	249.8	91	48	9.7	12.5	224.8	35.8
44-85	30	8.1	12.5	24.3	249.8	105.2	75	12.8	10	267.8	45.2
44-86	30	8.1	14.5	25	232.1	91	48	9.7	12.5	212.4	23.4
44-87	30	8.1	12.5	24.3/40	262.8	102	64	9.7	12.5	278.8	45.8
44-89	45	8.1	12.5	24.3	229.8	92.4	40	9.7	12.5	203.1	31.1
44-A1	±30/60	8.1	12.5	24.3	249.6	91.3	48	9.7	12.5	249.1	31.1
44-A2	±30/60	8.1	12.5	24.3	250.1	98.3	57.3	9.7	12.5	244.4	31.4
44-A3	30	8.1	14.5	25	232.1	91	48	9.7	12.5	212.1	28.1
44-K3	±30/60	8.1	12.5	24.3	249.8	99.3	57.3	9.2	12.5	244.1	31.1
44-Z	±30/60	8.1	14.5	24/40	192.5	105.2	75	9.7	10	180.1	21.1
45-03	±30/60	8.1	14.5	40	230	105.9	75	12.8	10	292.9	40.9
45-04	30	8.1	12.5	40.6	254.8	105.9	75	12.8	12	347.9	45.9
45-05	30	8.1	14.5	40	242.8	105.9	75	12.8	10	285.9	33.9
50-01	±30/60	8.1/9.7	14.5	24/40.6	256	107	57.3	12.8	10	263.1	28.1
50-02	±30/60	8.1/9.7	14.5	24/40.6	267	107	57.3	12.8	10	263.1	28.1

Fig. NO.	A	B	C	D	E	F	G	H	I	J	K
50-03	±30/60	8.1/9.7	14.5	24/40.6	266.5	112	75	12.8	10	260.1	38.1
50-04	±30/60	8.1/9.7	14.5	24/40.6	295.5	120.8	89	15.9	12	318.1	48.1
50-05	±30/60	8.1/9.7	14.5	24/40.6	240.5	112	75	12.8	10	254.9	32.9
50-06	60	9.7	14.5	36	290.1	112	75	12.8	10	260.1	38.1
50-07	60	9.6	14.5	39.8	353	124.7	89.1	15.9	12	379	82
50-12(b)	45	8.1/9.7	14.5	24/40.6	306	120.8	89	15.9	12	329	59
50-55	±30/60	8.1/9.7	14.5	24/40.6	285.5	112	75	9.7	8	260.1	38.1
50-H2	45	9.6	14.5	36	270.1	112	75	12.8	10	250.1	28.1
55-01	±30/60	9.7	14.5	24/40.6	321.2	129	89	15.9	12	365/325	54.8
55-51	±30/60	9.7	14.5	24/40.6	306.2	129	89	15.9	12	358/318	48
55-51(b)	45	9.7	14.5	24/40.6	307.2	129	89	15.9	12	358/318	49